Using Timing Data to Measure Signal Attenuation in the G^0 Scintillators

Nathan Baillie
Advisors: D. Armstrong and J. Roche
College of William and Mary

August 3, 2001

Abstract

In this research project cosmic ray data will be used to measure signal attenuation and check the geometrical efficiency of the trigger along the G^0 scintillators. For an equal amount of energy lost in the scintillator, the amplitude of the detected signal varies as the hit location along the scintillator varies. Particles that strike the scintillators cause the material to emit photons. The intensity of photons decreases due to different processes as they travel through the scintillators and the light guides (surface reflection). This attenuation is characterized by the attenuation constant μ in the equation $A = A_0 e^{-\mu x}$, where x is the location of the hit. Timing information is used to measure the hit location. This report describes the setup used for the measurement as well as the analysis of the data. The values of the attenuation constants for the 16 scintillator pairs of Octant 5 are given.

Contents

1 Overview of the G^0 Experiment **3**

2 Signal Attenuation **4**
2.1 The Cause 4
2.2 Why is it important to study? 7

3 Experimental Setup **7**

4 Corrections to Data Sets **13**
4.1 Pedestal 13
4.2 Walk 14

5 Results and analysis **18**

A Scintillators **19**

B Photomultiplier Tubes (PMTs) **20**

C Electronics **21**

D Attenuation Macro File **22**

E Landau and Exponent Fit **28**

1 Overview of the G^0 Experiment

It is well known that the matter around us is made of atoms and that those atoms consist of three types of building blocks. Electrons make up the outer edges of these atoms and the central core, or nucleus is made of protons and neutrons. The particles in the nucleus make up 99.9% of the mass in the atom, yet the structure of these building blocks is still not clear. The quark constituent model is a very successful and effective model that describes the nucleons as an arrangement of three elementary particles known as quark constituents of mass 310MeV called up quarks and down quarks that make up the nucleons and give them their charge. Protons have two ups and a down, neutrons have two downs and an up. An up quark has a charge of +2/3 and a down quark is -1/3, so giving the nucleons their well known charges of +1 and 0. The success of this model is that it is able to describe very accurately the mass spectrum of the excited states of the nucleons. However this model is inaccurate in that the experimental values of the up and down quarks are 5±3 and 10±MeV. It is also unable to describe the radius of the nucleons. The actual theory of the interaction of quarks is Quantum Chromodynamics (QCD). The quarks in this theory interact with each other by means of yet another particle called a gluon. QCD allows these gluons to split into quark/anti-quark pairs before again combining into a gluon again as they travel between quarks. Ups and downs are not the only quarks in this model. There are more massive quarks called strange, charm, beauty, and truth. The gluons and quark/anti-quark pairs are believed to make up roughly 30%[1] of the mass of the proton and account for a large fraction of the spin associated with the nucleon. It is not yet possible to solve QCD equations for low-energy phenomenon such as a single proton and therefore one has to predict how the "sea" affects the proton's mass, charge density and current density using effective models.

At Jefferson Lab the electron beam is the tool with which to probe the inner workings of the proton. The polarized beam will travel into Hall C onto a cryogenic liquid hydrogen target as depicted in Figure 1. At this juncture the protons produced during this interaction are routed to the focal plane detector by passing through a dedicated magnet (pink on Figure 1). They are then detected on a ring of scintillators. G^0 will be used to tell us something about the Form Factors of the proton. Form Factors are simply a tool to indirectly quantify the charge and current densities using a Fourier Transform. Since it would be very difficult to measure these characteristics directly, the Form Factors give us a way to find the charge and current densities if we know the momentum of electrons before and after the elastic scattering off the protons in the target.

The G^0 detector system is made of eight separate sections of 16 scintillator pairs. These "octants" (see Figure 2) are arranged in a circular array with a

[1] This experimental value is largely affected by the hypothesis of the analysis (model dependent).

hole in the center for the beam to pass through. The scintillators (see Appendix A) are connected via glue joints to light guides to transport the photons, produced when a particle hits the scintillator, to photomultiplier tubes (PMT, see Appendix B). The attenuation of the signal through the detectors is the topic of this report. The tubes give an analog signal which is routed through a series of electronic components before being registered in a computer file.

2 Signal Attenuation

When a number of photons n is produced by a particle hitting the scintillator, it has been found that the number of photons that strike the photocathode is less than $0.1n$. This is due to a multitude of processes including:

1. Attenuation in the scintillator
2. Attenuation due to optical contact between the junctions of scintillator/light guide and light guide/PMT

This paper is concerned only with the attenuation within the scintillator. The causes of this attenuation and it's relevance to G^0 will be addressed.

2.1 The Cause

This discussion is paraphrased from [1].
Consider first the case of a rectangular piece of scintillator with length L and height H (see Figure 3). Taking the scintillator as two dimensional, a photon is generated at the location (x_o, y_o) and in the $\vec{V}$-direction. If the photon's first bounce on the internal wall corresponds to the critical angle between the environmental index of the light pipe and the air, the photon will be totally internally reflected and therefore reach the end of the detector.

$$\theta \geq arcsin(\frac{n_{air}}{n_1}) \tag{1}$$

where θ is the angle described in Figure 3, n_{air} is the index of refraction of air ($n_{air} = 1$), and n_1 (=1.58) is the environmental index of refraction. The percent of light that reaches the end of the detector is given by:

$$\begin{aligned} E &= 1 - \frac{2}{\pi} arcsin(\frac{n_{air}}{n_1}) \\ E &= 56.37\% \end{aligned} \tag{2}$$

The surfaces of the scintillator are not perfect, therefore the the reflectivity (ϵ) governs the probability that the photon will make it through the detector. The fraction of light at the end of the detector is a function of the number of reflections: $R = \epsilon^N$, where N is the number of reflections:

$$N = E[\frac{(L - x_o) - (H - y_o)tan\theta}{Htan\theta}] + 1 \tag{3}$$

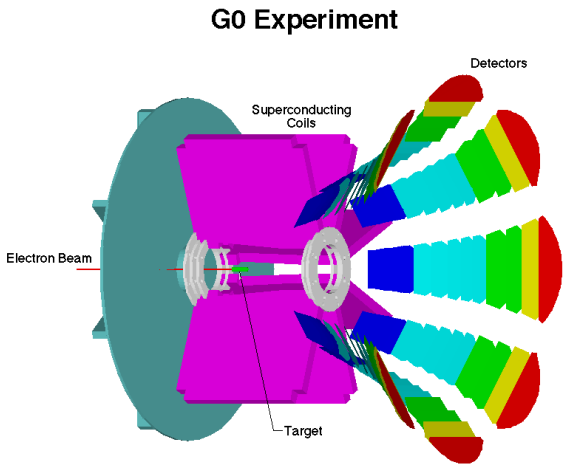

Figure 1: *Diagram of the Experimental Apparatus*

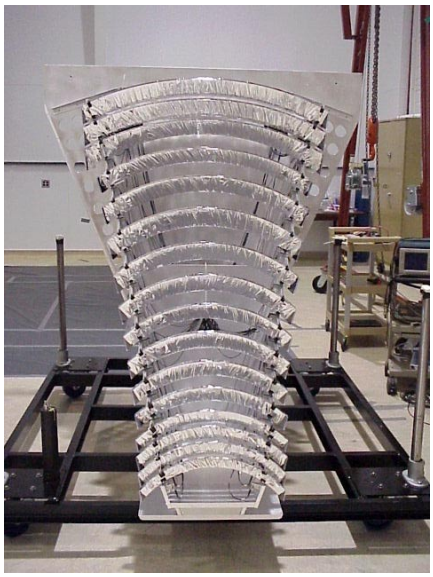

Figure 2: *One octant of the G^0 detector is made out of 16 arc-shaped scintillator pairs*

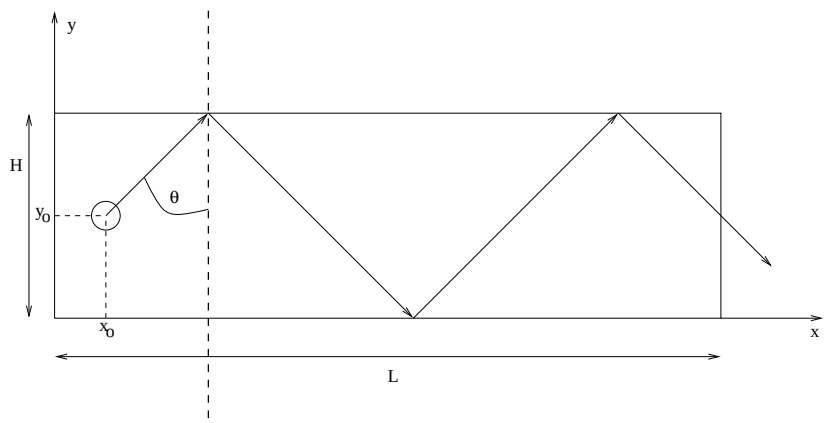

Figure 3: *Example of a rectangular piece of scintillator*

If the light does not bounce on the scintillator at all, the fraction of light hitting the end is not 1 but has some attenuation after a length l by a factor

$$B = e^{-\frac{l}{L_{bulk}}} \tag{4}$$

where L_{bulk} is the bulk attenuation length and l is the length of the path

$$l = \frac{L - x_o}{sin\theta} \tag{5}$$

The initial location of the generated light affects the fraction of the initial number of photons collected. The overall probability that a photon will reach the end of the detector is

$$dP = \frac{2}{\pi} * \epsilon^{E[\frac{(L-x_O)-(H-y_O)tan\theta}{Htan\theta}]+1} * e^{-\frac{l}{L_{bulk}}} d\theta \tag{6}$$

The attenuation in each scintillator should follow the simple exponential decay

$$A = A_0 e^{-\mu t} \tag{7}$$

where A is the amplitude of the signal, A_o is the maximum amplitude, μ is the characteristic value of the attenuation coefficient for each scintillator pair, and t is the time it took the photon to reach the PMT (proportional to distance traveled).

2.2 Why is it important to study?

It is imperative that the attenuation coefficient for each scintillator is known in order to provide a means to test the yellowing in the scintillator over time. Scintillators exhibit a yellowing process in the material when exposed to radiation over a period of time. When the light yeild appears to be decreasing, the attenuation coefficient can be measured again and compared with data taken before the detector was placed in a high radiation environment. Another way to test the yellowing is the Gain Monitoring System which is composed of a laser shining on each end of the scintillator.

3 Experimental Setup

Figure 4 shows the setup used for the measurement. Cosmic rays hit the scintillator all along its length. The energy deposited into the material is transformed into light. After attenuation, the light hits the photomultipler tubes and transformed into an analog signal. First the analog signal from the PMT is split into two, one routed to the Discriminator (see Appendix C) and the other to the Analog to Digital Converter (ADC, see Appendix C). The signal sent to the ADC from the PMT is analog, but the one sent to the Discriminator is converted to a logic signal. The logic signal from the Discriminator is again split into two with one going to the Coincidence Unit (CU, see Appendix C) and the other to the Time to Digital Converter (TDC, see Appendix C). The CU produces a gate which provides the start to the TDC while the signal from the Discriminator provides the stop. The gate is also sent to the ADC to tell it when to integrate the signal area of the events coming from the PMTs. The ADC and TDC spectra is then sent to the computer to be recorded. The data is analyzed using the Physics Analysis Workstation.

In our setup we have made PMT 4 the common START for the gate by delaying the signal from PMT 4 by 16ns[2]. Therefore PMT4 always gives the START as is seen in Figure 6 A consequence of this arrangement is that there is no information recorded in PMT 4 and almost no information in PMT 2 because cosmic rays are mainly perpendicular to the scintillator. The TDC distribution in Figure 7 shows that the time in PMT 4 is only a fixed amount of delay given by the cables with PMT 2 being virtually the same[3]. The information on the location of the hit is given by PMT's 1 and 3 as shown in the following discussion.

[2]Previous computation shows that the for the largest scintillator (16) the photons need 12ns to traverse the detector.

[3]The Gaussian distribution of PMT 2 is due to the fact that some of the cosmic rays are not coming at exactly 90°, and to the resolution of the PMT.

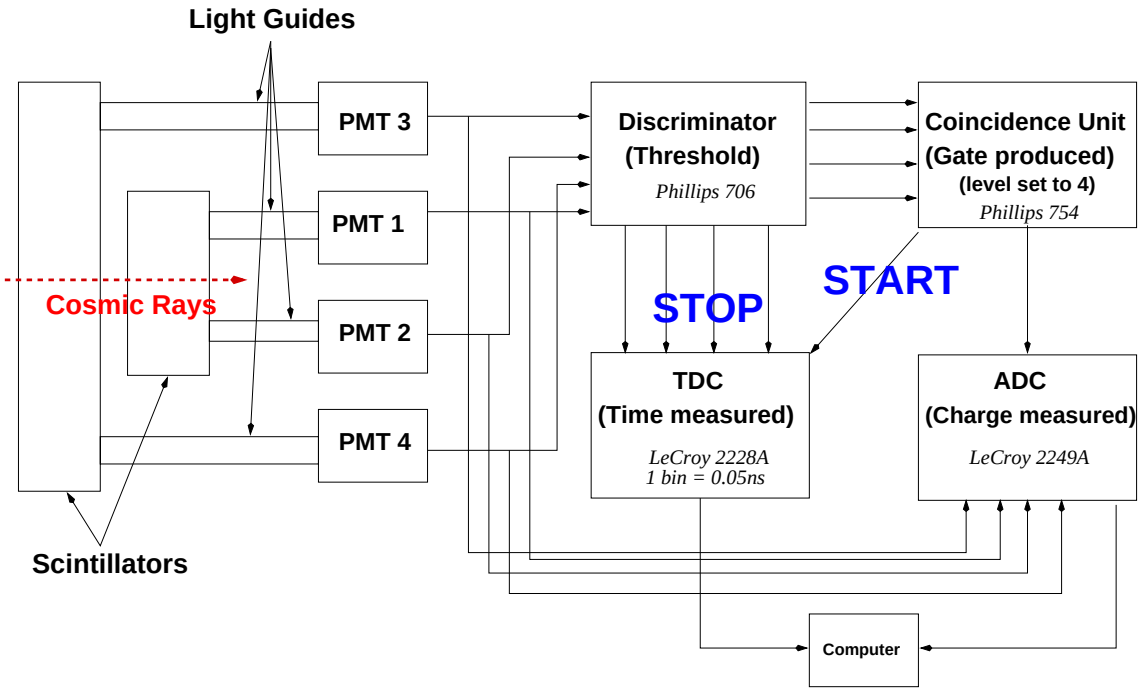

Figure 4: *Schematic of the test electronics*

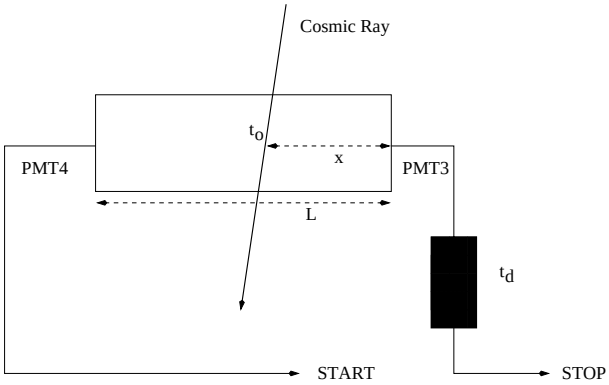

Figure 5: *A cosmic ray triggering a START and a STOP.*

Suppose a particle hitting the scintillator of total distance L at a distance x of PMT3 (see figure 5). The TDC measurement that follows is the difference between the START and STOP:

$$\begin{aligned}
PMT4(START) &= t_o + (L-x)v \\
PMT3(STOP) &= t_o + xv + t_d \\
TDC3 = STOP - START &= xv - Lv + xv + t_d \\
&= 2xv - Lv + t_d \\
when \quad x = 0, TDC &= -Lv + t_d \\
when \quad x = L, TDC &= Lv + t_d
\end{aligned}$$

Where t_o is the time when the particle hit the detector, and t_d is the time of the delay in the cables. This tells us that the total range in time measured is proportional to twice the length of the detector.

Cosmic rays are used to accumulate data for the attenuation of the signal in the scintillators since the beam is not available. Previous studies of the attenuation were performed using a radioactive source at two locations on the scintillators - location was known but precision suffered because of the low number of data points. The advantage of cosmics is that they strike the detectors uniformly, but the downside is that it is not known where on the detector an individual cosmic ray hit. This is addressed by analyzing the corresponding TDC values. Figure 8 shows the distribution of ADC values as a function of the TDC values. The dark diagonal region above 400 ADC channel shows the attenution of the signal as a function of the position of the hit along the scintillator, measured here by the TDC value.

The procedure followed to obtain data for the attenuation was to make a series of cuts (usually 10) on the TDC values of PMT3. Next, the ADC spectrum for this range of TDC was fit to a landau+exponential curve and the peak of the landau taken as the ADC value for this range (Figure 9). The mean TDC value for the range was then plotted against the ADC value and PAW was used to fit an exponential to this curve (Figure 10).

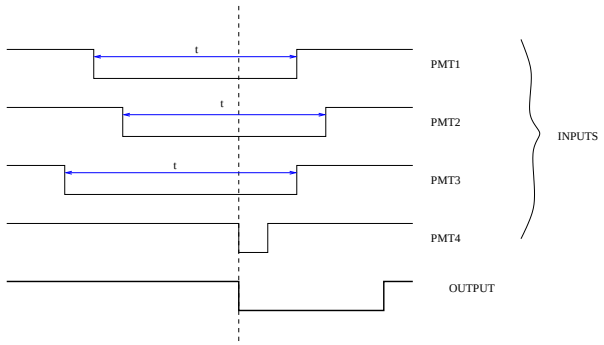

Figure 6: *Input and Output signals of the Coincidence unit - PMT 4 is always giving the START of the output signal*

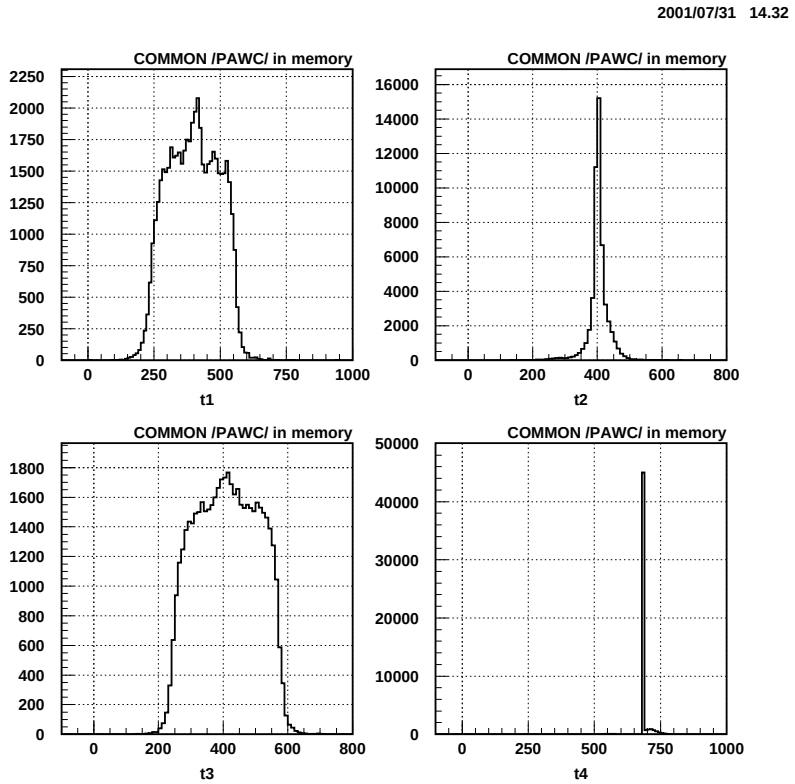

Figure 7: *The TDC distributions that result from our configuration.*

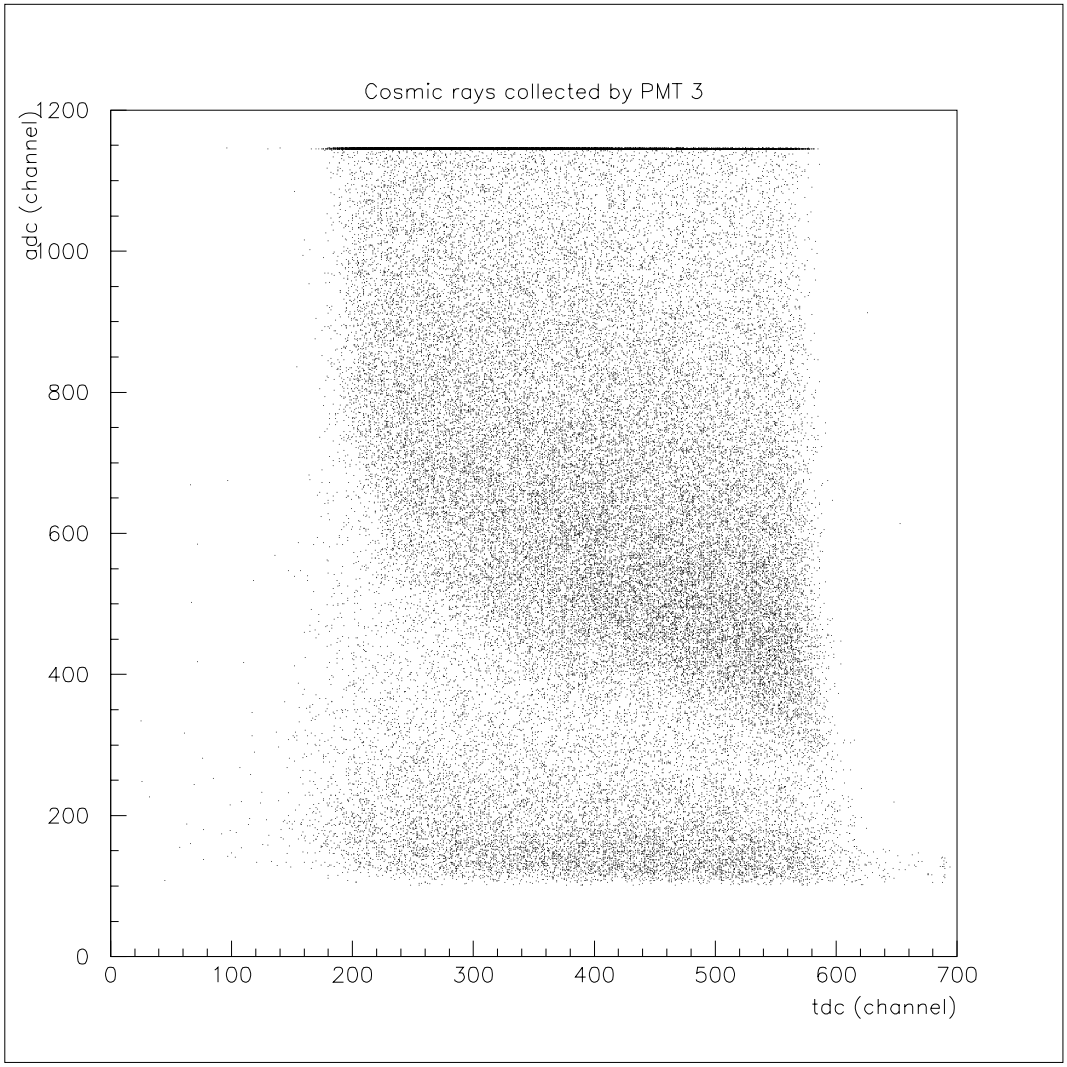

Figure 8: *Amplitude vs. Time for Scintillator 15. Note the walk is around 40 ADC channels.*

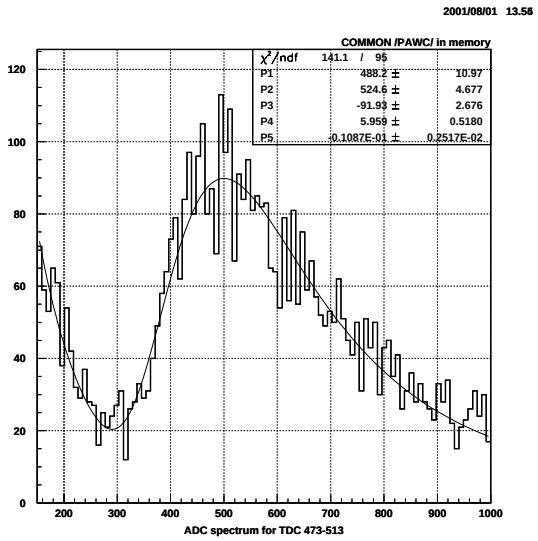

Figure 9: *ADC spectrum for particular TDC range fit to a landau plus an exponential function (see Appendix E).*

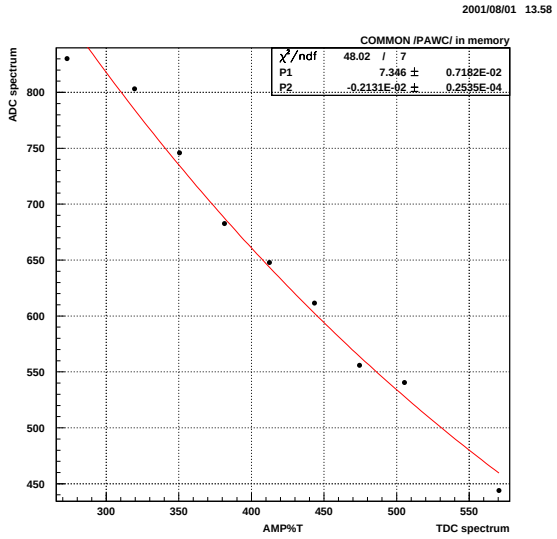

Figure 10: *The attenuation curve - note parameter 2 is μ.*

4 Corrections to Data Sets

In order to obtain the maximum amount of precision, it is necessary to consider two systematic effects affecting the collected raw data. The first of those corrections was the pedestal and the second, and more confusing than anticipated, was the walk.

4.1 Pedestal

Due to the fact that we are using a set up that requires a linear transmission gate, corrections have to be made because of a characteristic of this gate called the pedestal. The pedestal is an effect of the gate in the ADC. The ADC integrates the charge of the signal within the gate (see Figure 11).

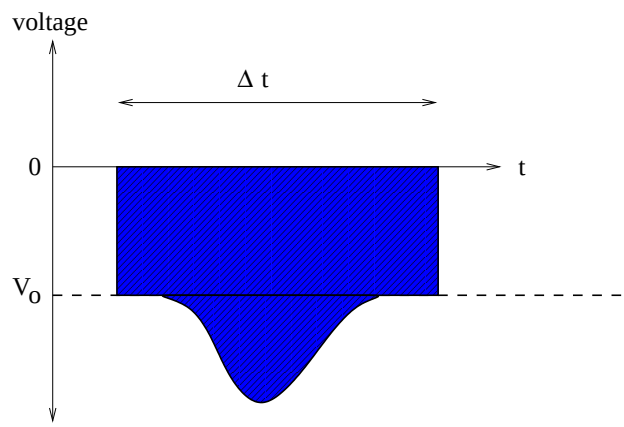

Figure 11: *The ADC integrates the charge over the entire range of of the gate.*

$$
\begin{aligned}
ADC &= \int_{t=0}^{\Delta t} V(t)dt \\
&= \int_{t=0}^{\Delta t} [V_o + \Delta V(t)]dt \\
&= \int_{t=0}^{\Delta t} V_o dt + \int_{t=0}^{\Delta t} \Delta V(t)dt \\
&= R\int_{t=0}^{\Delta t} I_o dt + R\int_{t=0}^{\Delta t} \Delta I(t)dt \\
&= R\phi_o + R\phi \\
&= pedestal + R\phi
\end{aligned}
$$

In the last expression, $R\phi$ is proportional to the amplitude of the signal, $R\phi_o$ is a charge present even if no event falls in the gate. It's value is a function of the

difference of reference potential between the actual and the internal reference potential of the ADC. Also, this pedestal (referred to as such because it makes the data look as if it is being raised on a flat pedestal) is a function of the resistors and capacitors within the ADC and is unique for each channel of the ADC. In the setup used for these measurements capacitors are used on each channel in order to keep the pedestal a constant small value. For these measurements, the data is collected out of two scintillator pairs at a time. Half of the events correspond to cosmic rays going through only one scintillator pair and as a result the ADC will integrate charges corresponding to "no event" half of the time. Consequently the pedestal for each ADC channel is measured during each data run.

4.2 Walk

The effect of walk is due to the fact that not all of our signals have the same amplitude, i.e. not all of our particles arrive on the same location on the scintillator. We are using leading edge discriminators, which means that the discriminator gives a response as soon as the pulse crosses the threshold (see Figure 12). Using a Constant Fraction Discriminator (CFD) in the G^o experiment will eliminate walk, however they are not available for this setup and so walk must be accounted for.

1. **Source of Walk and Minimization**
   Consider two particles which arrive at the PMT at the same time but one has a lower peak because it traveled a longer overall distance (Signals B and C in Figure 12). The two signals cross the threshold at different times, even though the signals are exactly coincident. Now consider the two pulses A and B whose amplitudes are larger. The walk is not as prevalent in this region of amplitudes.

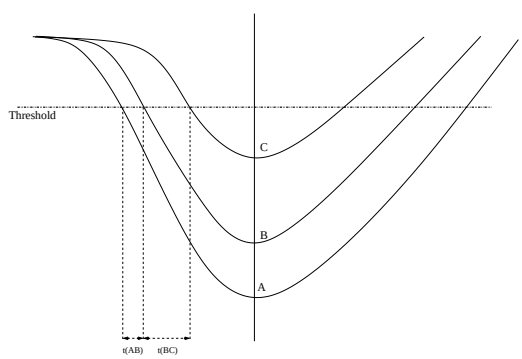

Figure 12: *The walk in a leading edge discriminator. The three signals cross the threshold at different times, but the time difference between A and B is not as great as the difference between B and C.*

An efficient way to reduce the error on the time measurement is to adjust the amplitude of the produced signal on a high charge by applying a high HV value on the PMT. Indeed the charge measured by the ADC is proportional to the energy lost (ΔE) by the particle hitting the scintillator times the attenuation along the scintillator, times the gain of the PMT.

$$ADC \propto \Delta E \times attenuation factor \times gain(HV) \tag{8}$$

The gain of the G^0 PMT's varies with the HV as shown in the following equation[4]:

$$gain(HV) = g_0(HV_0)\left(\frac{HV - 750}{HV_0 - 750}\right)^8 \tag{9}$$

In Figure 8 one can intuite the importance of the walk on the right hand distribution. For high values of the ADC signal (larger than 400), the TDC distribution is independent of the ADC value, while for smaller value the TDC information varies exponentially with the ADC. As a result it was chosen to apply a HV on each PMT such that the average ADC information equals 600 channels for each PMT. In these conditions the walk effect is negligible and the next section will prove this hypothesis using dedicated measurements.

2. **Measuring the Walk**
   The procedure for this section was not as straight forward as originally planned for. To measure the walk curve accurately it is necessary to vary the amplitude without varying the actual time, that is for a fixed TDC start you want to measure the variation of the stop due to the variation of the amplitude signal only. The first method was to shine a LED in front of the PMT face (see Figure 13). The fixed TDC start given by the pulser supplying voltage to the LED, the TDC stop given by the signal out of the PMT. With this method there are three ways to vary the amplitude of the PMT.

   (a) Varying the HV applied to the PMT's.
   This method is not reliable because the time the electrons need to travel through the PMT dynode chain is a function of the HV applied to the PMT's. A variation of 100V at the terminals of the PMT was computed to cause a variation of the transit time of 1ns[5].

[4] This variation corresponds to the particular HV chain divider used to supply power to the G^0 PMT's. It was previously calibrated by J.Roche

[5] J. Roche, J. Secrest, private communication.

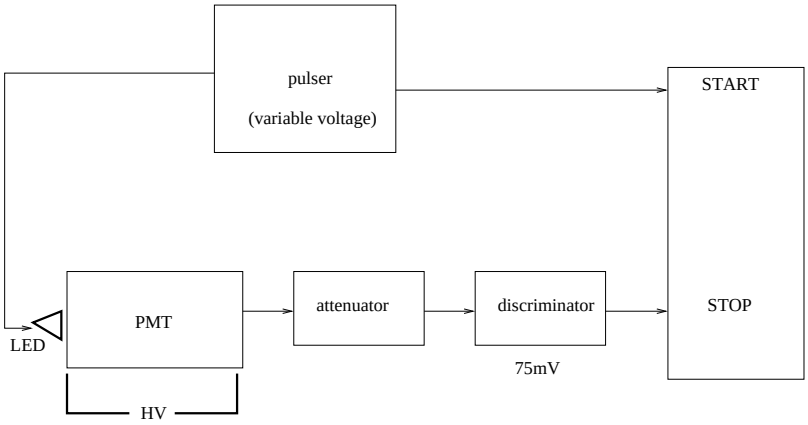

Figure 13: *The LED shines directly onto the PMT, with a pulser providing the TDC start.*

(b) Varying the voltage supply level at the LED terminal.
This method could be biased by the fact that a small voltage supply to the LED could cause it to shine light at a later time. This hypothesis was tested and it appears that if this delay time exists, we were unable to measure it.

(c) Attenuating the signal produced by the PMT before sending it to the discriminator.
This method is the most reliable.

Figure 14 shows the results of those studies by appling methods 2 and 3. The walk for the LED is around 350 TDC channels at its maximum, however we realized that the walk using the LED as our source and the walk from cosmic rays differs by about 300 TDC channels (see Figure 8 at large time values). This is due to the fact that the LED pulse has a different rise time than the cosmic ray signal (LED -> 15.2ns Cosmics -> 4ns). The rise time is the time it takes the pulse to increase from 10% of the peak to 90%. It is clear that a signal with a similar rise time to the cosmic signal is necessary to measure the walk. Those measurements are described below.

The measurement was made using a signal pulser made to have a rise time of 3ns by routing the pulse through a series of modules until the target rise time was aquired - a difference of only 1ns from the cosmics. The signal is split in two one giving a fix start, the other replica being sent to an attenuator in order to vary the amplitude of the signal entering the discriminator. Figure 15 depicts the function that the walk follows and the corresponding equation. Note the drift is only 30-35 TDC channels as opposed to 350 for the LED, which is more in agreement with cosmic

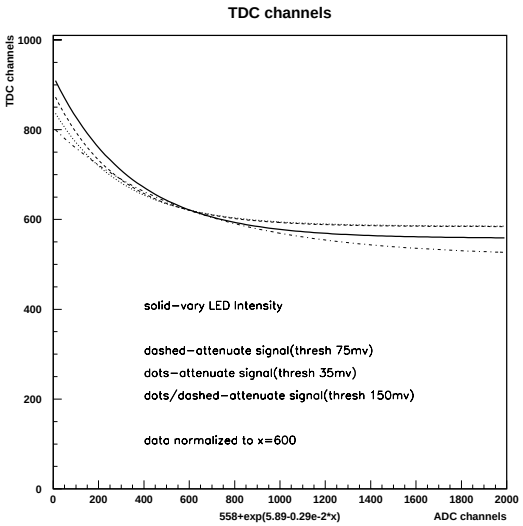

Figure 14: *The walk curve as measured using the LED and varying LED intensity and then signal attenuation*

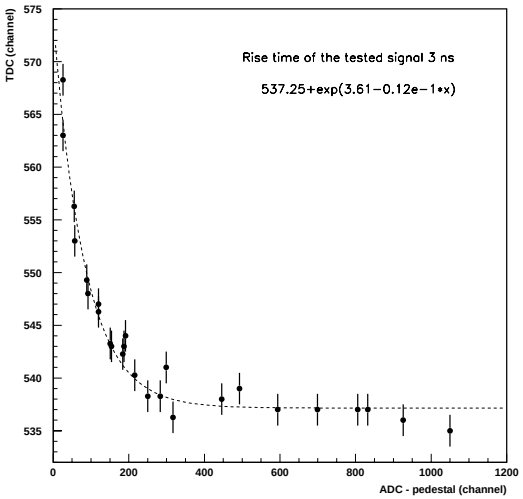

Figure 15: *A recent measurement of the walk curve.*

Scintillator Number	μ (per TDC channel)
1	data not yet analyzed
2	data not yet analyzed
3	$-2.49 \times 10^{-3} \pm 0.145 \times 10^{-3}$
4	data not yet analyzed
5	data not yet analyzed
6	$-2.02 \times 10^{-3} \pm 0.700 \times 10^{-4}$
7	data not yet analyzed
8	data not yet analyzed
9	$-2.49 \times 10^{-3} \pm 0.886 \times 10^{-4}$
10	$-2.30 \times 10^{-3} \pm 0.435 \times 10^{-4}$
11	$-2.13 \times 10^{-3} \pm 0.253 \times 10^{-4}$
12	data not yet analyzed
13	$-2.01 \times 10^{-3} \pm 0.384 \times 10^{-4}$
14	$-1.77 \times 10^{-3} \pm 0.239 \times 10^{-4}$
15	$-1.60 \times 10^{-3} \pm 0.275 \times 10^{-4}$
16	data not yet analyzed

Table 1: *Values of μ for the rear scintillators*

data. Since signals are matched to 600 ADC channels and the average attenuation of the signal across the G^0 is typically two, the signals are being spread between 400 and 800 as shown in figure 8. It is apparent from Figure 15 that the walk in this region is 0.3 channels for 400 and 0.002 channels for 800- not a significant correction. The walk effect does not affect the measurement and is not corrected in the attenuation factors presented later.

5 Results and analysis

The following are results for the value of μ on the back detectors:

A Scintillators

Scintillation detectors take advantage of the fact that certain materials emit light when struck by a nuclear particle or radiation. The electrons in the atoms and molecules in the material become excited when the energy is deposited into them. As they become stable again (drop down to the next energy level) photons are generated. This process is called luminescence and if the reemission occurs within 10^{-8} sec it is known as fluorescence. If the the excited state is meta stable however, the reemission of the energy is delayed and an afterglow occurs. This characteristic is minimized in our detectors. The fluoresce photons are transported to the PMT by internal reflection in the light guides. The light is then converted into photoelectrons and amplified into a weak current. Scintillators are used because of two advantages.

1. **Sensitivity to energy:**
   If the energy of the particles striking the scintillation material is above a certain threshold, the light output is directly proportional to this energy. The PMT also exhibits this characteristic and therefore the final signal is proportional to the energy.

2. **Fast Time Response:**
   Timing is a crucial aspect of G^0 because the experiment needs to register a large number of events to achieve a reasonable precision. Using scintillators allows us to detect a high rate of particles and reduce the runtime of the experiment. The response and recovery time of the material we use for the scintillator is short relative to other detectors (wire chambers, Cerenkov detectors, etc.).[2]

B Photomultiplier Tubes (PMTs)

The basic premise of the PMT is to convert a very tiny amount of light into a measurable electric current. This current can then be used to get information about the light hitting the PMT. The PMT consists of a photocathode followed by an electron collection system of dynodes to amplify the signal and finally an anode where the resulting current can be measured. The whole thing is housed in an evacuated glass tube and the PMTs used in G^0 are cylinders about 4.5 inches long with a radius of 1 inch. During the operation of the PMT the cathode, dynodes, and anode are connected to a high voltage that is divided among them in order to set up a potential ladder. When the photons hit the photocathode the photo-electric effect takes place.

$$E = h\nu - \phi \tag{10}$$

where E is the kinetic energy of emitted electron, ν is the frequency of incident light and ϕ is the photo-electric work function. A certain minimum frequency of the incoming photons is required before the photocathode will produce electrons. Next, the electrons are collected and focused on the first dynode by the application of an electric field. The time that it takes an electron from the photocathode is independent of the point of emission. When the electrons strike the electron-multiplier system, the dynodes absorb the energy from the electrons and allow a number of secondary electrons to escape. Each dynode has a secondary emission factor, δ which is the average number of secondary electrons emitted. These electrons are then accelerated and guided by the electric field onto the next dynode where more electrons are liberated. These electrons are finally deposited onto the anode where the current can then be measured.[2]

C Electronics

1. **The Discriminator:**
   The discriminator is a device that responds to input signals from the PMTs that have a pulse height that is above a certain level. This level is set by the user and is called the threshold. The purpose of the discriminator is to eliminate low amplitude noise from thermal processes in the PMTs and the scintillators. For the particular discriminator that we use in the test system, the output pulse is triggered as soon as the amplitude reaches the threshold level. This is called leading edge triggering. This method is subject to a phenomenon called walk which will be discussed in detail later. The speed of the discriminator is measured by using double pulse resolution and continuous pulse rate. Double pulse resolution is the smallest time separation between two input pulses that the discriminator can still tell the difference between them and produce two logic signals. The continuous pulse rate is simply the highest frequency of pulses the discriminator can handle.

2. **The Coincidence Unit (CU):**
   The coincidence unit reads the logic signals coming from the discriminator. If any part of these logic signals overlaps (we usually use a coincidence level of four) then an output signal is produced. This signal is known as the gate and it is sent to the Time to Digital Converter and to the ADC. In our set up we have a gate that is 140 ns wide in order to insure that a wide range of signals can be seen in the ADC.

3. **The Analog to Digital Converter (ADC):**
   The ADC is a unit which takes the input pulse from the PMT and converts this information into digital form. The computer shows us ADC channels and each channel corresponds to a voltage. The smaller the voltage in each channel, the higher the resolution of your ADC spectrum. The ADC needs a time range to integrate the signal over because we are using charge sensitive ADC. This range is provided by the gate and all currents in this gate are measured.

4. **The Time to Digital Converter (TDC):**
   The TDC uses the START from the gate produced by the coincidence unit to tell it when to measure the time that the signal arrives. During this time the TDC is set to "busy" to prevent other STARTs from occurring. The logic signal from the discriminator tells the TDC to STOP. The channels of the TDC work in the same way as those of the ADC, each channel acts as a bin where time measurements within a certain range are placed.[2]

D Attenuation Macro File

The following kumac reads an ntuple file and a file that contains the cuts to be made on the TDC spectrum. It then finds the maximum ADC value in the TDC region and writes it to a file. It does this for PMT 3 and 4. The commands then plot the ADC and TDC values and fit it to an exponential function.

file: attenuation.kumac

```
macro run nrun
close 33
fortran/file 33 [nrun].ps
meta 33 -111

exec nt\_small [nrun]

vec/del nmin,nmax
vec/read nmin,nmax cut\_[nrun].text

nloop=\$sigma(nco(nmin))
vec/cr pos3([nloop])
vec/cr epos3([nloop])
vec/cr chi3([nloop])
vec/cr time([nloop])
vec/cr pos4([nloop])
vec/cr epos4([nloop])
vec/cr chi4([nloop])
set plci 2

do i=1,[nloop]
message \$[i]
min=\$sigma(nmin([i]))
max=\$sigma(nmax([i]))
nt/cuts \$1 [min]<t3<[max]
message cut -> [min]<t3<[max]
k=110+[i]
h/del [k]
titre='a3 for '//[min]//'<t3<'//[max]
1d [k] [titre] 100 150 1000
nt/proj [k] 10.a3 \$1
vec/cr par(5) r  500 500 -100 5 -0.01
vec/cr epar(5)
vec/cr chi2(1)
h/fit [k] landau\_exp.f ! 5 par ! ! ! epar
```

```
Application COMIS Quit

        SUBROUTINE chiq

        COMMON/HCFITS/NCFITS,NPFITS,NFPAR,FITCHI,FITPAR(35),FITSIG(35)
     +             ,FITDER(35)

        vector chi2
        chi2(1)=fitchi
        END
 Quit
*
 Call chiq
*-----------------------------------------------
vec/input pos3([i]) par(2)
vec/input epos3([i]) epar(2)
vec/input chi3([i]) chi2(1)
vec/input time([i]) \$sigma(([min]+[max])/2.)
enddo

message ' ************ distribution for pmt 4 *******'

do i=1,[nloop]

min=\$sigma(nmin([i]))
max=\$sigma(nmax([i]))
nt/cuts \$1 [min]<t3<[max].and.100<a4<1000
j=210+[i]
h/del [j]
titre='a4 for '//[min]//'<t3<'//[max]
1d [j] [titre] 100 0 1000
nt/proj [j] 10.a4 \$1
vec/cr par(5) r 500 500 -100 5 -0.01
vec/cr epar(5)
vec/del chi2
vec/cr chi2(1)
h/fit [j] landau\_exp.f ! 5 par ! ! ! epar


*
 Call chiq
*-----------------------------------------------
vec/input pos4([i]) par(2)
vec/input epos4([i]) epar(2)
vec/input chi4([i]) chi2(1)
vec/input time([i]) \$sigma(([min]+[max])/2.)
```

```
enddo
close 10


h/file 1 [nrun]\_sum.hbook ! n
hrout *
close 1

vec/write time,pos3,epos3,chi3,pos4,epos4,chi4 [nrun].fit '(f6.1,x,2(2(f5.1,x),f3.1,x))'

vec/write pos3,time,epos3 3amptime[nrun].text '(f7.1,x,f7.1,x,f7.1,x)'

ve/cre t([nloop])

ve/cre amp([nloop])

ve/cre eamp([nloop])

vec/read amp,t,eamp 3amptime[nrun].text

igset mtyp 20

vec/pl amp%t eamp

vec/fit t amp eamp e s
close 33

return
```

```
do i=1,[nloop]
message \$[i]
min=\$sigma(nmin([i]))
max=\$sigma(nmax([i]))
nt/cuts \$1 [min]<t3<[max]
message cut -> [min]<t3<[max]
k=110+[i]
h/del [k]
titre='a3 for '//[min]//'<t3<'//[max]
1d [k] [titre] 100 150 1000
nt/proj [k] 10.a3 \$1
vec/cr par(5) r  500 500 -100 5 -0.01
vec/cr epar(5)
vec/cr chi2(1)
h/fit [k] landau\_exp.f ! 5 par ! ! ! epar

Application COMIS Quit

        SUBROUTINE chiq

        COMMON/HCFITS/NCFITS,NPFITS,NFPAR,FITCHI,FITPAR(35),FITSIG(35)
     +             ,FITDER(35)

        vector chi2
        chi2(1)=fitchi
        END
 Quit
*
 Call chiq
*-----------------------------------------------
vec/input pos3([i]) par(2)
vec/input epos3([i]) epar(2)
vec/input chi3([i]) chi2(1)
vec/input time([i]) \$sigma(([min]+[max])/2.)
enddo

message ' ************ distribution for pmt 4 *******'

do i=1,[nloop]

min=\$sigma(nmin([i]))
max=\$sigma(nmax([i]))
nt/cuts \$1 [min]<t3<[max].and.100<a4<1000
j=210+[i]
h/del [j]
titre='a4 for '//[min]//'<t3<'//[max]
```

```
1d [j] [titre] 100 0 1000
nt/proj [j] 10.a4 \$1
vec/cr par(5) r 500 500 -100 5 -0.01
vec/cr epar(5)
vec/del chi2
vec/cr chi2(1)
h/fit [j] landau\_exp.f ! 5 par ! ! ! epar


*
 Call chiq
*-----------------------------------------------
vec/input pos4([i]) par(2)
vec/input epos4([i]) epar(2)
vec/input chi4([i]) chi2(1)
vec/input time([i]) \$sigma(([min]+[max])/2.)
enddo
close 10


h/file 1 [nrun]\_sum.hbook ! n
hrout *
close 1

vec/write time,pos3,epos3,chi3,pos4,epos4,chi4 [nrun].fit '(f6.1,x,2(2(f5.1,x),f3.1,x))'

vec/write pos3,time,epos3 3amptime[nrun].text '(f7.1,x,f7.1,x,f7.1,x)'

ve/cre t([nloop])

ve/cre amp([nloop])

ve/cre eamp([nloop])

vec/read amp,t,eamp 3amptime[nrun].text

*realtime=t4+63.4-exp(5.89-0.29e-2*pos4)-time-63.4+exp(5.89-0.29e-2)*pos3)

igset mtyp 20

ve/print amp

ve/print t

ve/print eamp
```

```
wait

vec/pl amp%t eamp

wait

vec/fit t amp eamp e s
close 33

return
*************************************************************
*macro all

*exec run 7990
*wait
*exec run 7991

*return
```

E Landau and Exponent Fit

This is the code for the fit used to find the maximum ADC values:
file:landau_exp.f

```
      real function landau_exp(x)

*      vector par(3)
      common/pawpar/par(5)

      real p1(5),q1(5),p2(5),q2(5)
      real p3(5),q3(5),p4(5),q4(5)
      real p5(5),q5(5),p6(5),q6(5)
      real a1(3),a2(2)
      real u,ue,us,v
      real landau

      p1(1)=0.4259894875
      p1(2)=-0.1249762550
      p1(3)=0.03984243700
      p1(4)=-0.006298287635
      p1(5)=0.001511162253
      q1(1)=1.0
      q1(2)=-0.3388260629
      q1(3)=0.09594393323
      q1(4)=-0.01608042283
      q1(5)=0.003778942063

      p2(1)=0.1788541609
      p2(2)=0.1173957403
      p2(3)=0.01488850518
      p2(4)=-0.001394989411
      p2(5)=0.0001283617211
      q2(1)=1.0
      q2(2)=0.7428795082
      q2(3)=0.3153932961
      q2(4)=0.06694219548
      q2(5)=0.008790609714

      p3(1)=0.1788544503
      p3(2)=0.09359161662
      p3(3)=0.006325387654
      p3(4)=0.00006611667319
      p3(5)=-0.000002031049101
      q3(1)=1.0
      q3(2)=0.6097809921
```

```
      q3(3)=0.2560616665
      q3(4)=0.04746722384
      q3(5)=0.006957301675

      p4(1)=0.9874054407
      p4(2)=118.6723273
      p4(3)=849.2794360
      p4(4)=-743.7792444
      p4(5)=427.0262186
      q4(1)=1.0
      q4(2)=106.8615961
      q4(3)=337.6496214
      q4(4)=2016.712389
      q4(5)=1597.063511

      p5(1)=1.003675074
      p5(2)=167.5702434
      p5(3)=4789.711289
      p5(4)=21217.86767
      p5(5)=-22324.94910
      q5(1)=1.0
      q5(2)=156.9424537
      q5(3)=3745.310488
      q5(4)=9834.698876
      q5(5)=66924.28357


      p6(1)=1.000827619
      p6(2)=664.9143136
      p6(3)=62972.92665
      p6(4)=475554.6998
      p6(5)=-5743609.109
      q6(1)=1.0
      q6(2)=651.4101098
      q6(3)=56974.73333
      q6(4)=165917.4725
      q6(5)=-2815759.939

      a1(1)=0.04166666667
      a1(2)=-0.01996527778
      a1(3)=0.02709538966
      a2(1)=-1.845568670
      a2(2)=-4.284640743

*      write(6,*)par(1),par(2),par(3)
```

```
      if(par(3).lt.0)par(3)=-1.*par(3)
      v=(x-par(2))/par(3)
      if(v.lt.-5.5)then
         u=exp(v+1.0)
         ue=exp(-1./u)
         us=sqrt(u)
         landau=0.3989422803*(ue/us)*
     +        (1.+(a1(1)+(a1(2)+a1(3)*u)*u)*u)
      elseif(v.lt.-1.)then
         u=exp(-1.*v-1.)
        landau=exp(-u)*sqrt(u)*
     +        (p1(1)+(p1(2)+(p1(3)+(p1(4)+p1(5)*v)*v)*v)*v)/
     +        (q1(1)+(q1(2)+(q1(3)+(q1(4)+q1(5)*v)*v)*v)*v)
      elseif(v.lt.1.)then
         landau=
     +        (p2(1)+(p2(2)+(p2(3)+(p2(4)+p2(5)*v)*v)*v)*v)/
     +        (q2(1)+(q2(2)+(q2(3)+(q2(4)+q2(5)*v)*v)*v)*v)
      elseif(v.lt.5.)then
         landau=
     +        (p3(1)+(p3(2)+(p3(3)+(p3(4)+p3(5)*v)*v)*v)*v)/
     +        (q3(1)+(q3(2)+(q3(3)+(q3(4)+q3(5)*v)*v)*v)*v)
      elseif(v.lt.12.)then
         u=1./v
         landau=u*u*
     +        (p4(1)+(p4(2)+(p4(3)+(p4(4)+p4(5)*u)*u)*u)*u)/
     +        (q4(1)+(q4(2)+(q4(3)+(q4(4)+q4(5)*u)*u)*u)*u)
      elseif(v.lt.50.)then
         u=1./v
         landau=u*u*
     +        (p5(1)+(p5(2)+(p5(3)+(p5(4)+p5(5)*u)*u)*u)*u)/
     +        (q5(1)+(q5(2)+(q5(3)+(q5(4)+q5(5)*u)*u)*u)*u)
      elseif(v.lt.300.)then
         u=1./v
         landau=u*u*
     +        (p6(1)+(p6(2)+(p6(3)+(p6(4)+p6(5)*u)*u)*u)*u)/
     +        (q6(1)+(q6(2)+(q6(3)+(q6(4)+q6(5)*u)*u)*u)*u)
      else
         u=1./(v-v*log(v)/(v+1))
         landau=u*u*(1+(a2(1)+a2(2)*u)*u)
      endif

*normalization
      landau=par(1)*landau

      landau_exp=landau+exp(par(4)+x*par(5))
```

```
end
```

References

[1] Caroline Cheze *Measurement of the light yield generated in G^0 scintillator assemblies*, (2000) 8-10.

[2] W.R. Leo *Techniques for Nuclear and Particle Physics Experiments*