Temporary Operational Safety Procedure (TOSP)

Cover Sheet

Division Serial Number PHY-01-008
(Assigned by Division EH&S Officer after approvals)

Issue Date:	JUNE 18, 2001
Expiration Date: (No later than 3 Months after issue date.)	SEPTEMBER 18, 2001
Title:	**G0 Cryotarget Test in the JLab Test Lab**
Location:	Designated area in the Test Lab of Jefferson Lab
Risk classification (See ***EH&S Manual*** Chapter **3210**.)	Without mitigation measures: 1 With specified measures implemented: 0
Author(s):	Kenneth Gustafsson

Supplemental technical validations:

Hazard reviewed:	Reviewed signature:	
CRYOGENICS	Dave Arenius 6/15/01	DANA ARENIUS
(2) ENGINEERING	David H Lady 6/13/01	DAVE KASHY
TARGET	Mike Seely	MIKE SEELY

Signatures		
(5) EH&S staff reviewer:	Bert Manzlak 6/15/01	BERT MANZLAK
(6) Division EH&S Officer approval:	D. Skopik 6/15/01	DENNIS SKOPIK
(1) Department or group approval:	R. Carlini 6/8/01	ROGER CARLINI
(3) Other approval(s):	BLDG. 58 MANAGER P. Martin for BOB BENNETT	BOB BENNETT
(4)	PHYSICS AREA SAFETY WARDEN Tom Carstens	TOM CARSTENS

Distribution:
copies to: affected area, authors, division EH&S officer
original: EH&S Reporting Manager

G0 Cryotarget Test in the JLab Test Lab

K. Gustafsson 6/14/2001

Purpose

To test the G0 cryotarget at cryogenic temperatures with gaseous helium. A schedule for the test is attached.

Description of Facility

The G0 cryotarget test will take place in its designated area in the Test Lab of Jefferson Lab. The designated area is shown on the attached floor plan of the JLab Test Lab. A cage with two lockable doors surround the G0 target test area. Only authorized personnel will have access to the G0 target test area. The cryotarget will be located inside two combined vacuum chambers: 1. the Cryotarget Service Module; 2. the Test Chamber. These two chambers are connected with an O–ring seal and contain the same vacuum. A hardcopy of an AutoCAD drawing of these two chambers is provided as an attachment. The Service Module is positioned on its own stand as is the Test Chamber. The Test Chamber stand is, in addition, located on a pair of rails. These two vacuum chambers can be assembled/disassembled by moving the Test Chamber on the rails. The gaseous Helium coolant will be provided from a Test Lab well head using an U–tube. This U–tube is connected to the Female Bayonet connectors which are part of the G0 cryocan located on top of the Service Module.

Authority and Responsibility

The members of the Caltech, Maryland, and JLab's Cryotarget Group staff and Hall C staff participating in the G0 cryotarget test will be responsible for following safe work procedures. Only people listed on the attached list of names are allowed to work inside the G0 target cage in the JLab Test Lab.

Analysis of Special Hazards

The G0 cryotarget is described in the "G0 Liquid Hydrogen Target Preliminary Design Document" written by C. E. Jones and E. J. Beise (www.npl.uiuc.edu/exp/g0/target/target.html). A copy of Appendix E of this document is attached. The target loop contains 6–8 L of gaseous helium at cryogenic temperatures. This corresponds to (ratio 20 K :300K) about 120 L of helium at room temperature. If the pressure in the cryotarget loop exceeds 15 psig the helium gas will vent directly into the air of the Test Lab via the gas panel. The minute amount, 120 L, of this very light, Helium, gas should not cause any hazard.

Hazard Controls

Only trained and informed personnel have access to the G0 cryotarget cage.

Personnel

JLab Group:

Mike Seely
Greg Smith
Joe Wilson
Joe Ozelis

Caltech Group:

Bob Carr
Silviu Covrig
Kenneth Gustafsson
Bob McKeown

Maryland Group:

Rauf Aamer
Betsy Beise
Chad Galley
Paul King

Names may not be added to the list below without the approval of Dr. Kenneth Gustafsson and Dr. Greg Smith.
logical AND.

I have read and understood the attached Temporary Operational Safety Procedure "G0 Cryotarget Test in the JLab Test Lab."

List of Names

Name	Signature	Date
Rauf Aamer		6/19/01
Betsy Beise		6/19/01
Bob Carr		6-18-01
Silviu Covrig		6/15/01
Chad Galley		6/18/01
Kenneth Gustafsson		6/15/01
Paul King		
Bob McKeown		
Mike Seely		
Greg Smith		6/15/01
Joe Wilson		
Joe Ozelis		
Walter Kellner		06-19-01
Paul Hood		6/20/01

Attachments:

1. Schedule of G0 Cryotarget Test

2. floor plan of JLab Test Lab showing the designated G0 Target Test area with respect to the adjacent designated areas

3. floor plan of G0 Target Test area

4. close–up of floor plan of G0 Target Test area

5. hardcopy of AutoCAD drawing of the cryotarget service module and test chamber (attachments 5A and 5B)

6. "G0 Liquid Hydrogen Target Preliminary Design Document", C. E. Jones and E. J. Beise, not attached, see www.npl.uiuc.edu/exp/g0/target/target.html

7. Addendum to Appendix E of the Preliminary Design Document

8. Pressure Rise in Vacuum Chambers Due to Rupture of Coolant Lines

9. ODH Assessment fro the G0 Cryotarget Test

10. Volume of the High Bay of the JLab Test Lab

11. G0 Target User's Guide

12. Additional Requirements for the Test

13. Call List

14. Gas Panel Plumbing Diagram (Attachments 14A and 14B)

15. Heat Exchanger performance evaluation graphs (Attachments 15 A, B, C, and 15 D)

Attachment 1

6/12/2001
K. Gustafsson
kgustafs@krl.caltech.edu

Test Schedule for the Cryotarget of the Hall C "G^0" Experiment

++++++++++++++++++ MONTH of June ++++++++++++++

Week 25 Monday June 18th 5 working days

Manpower at JLab: Bob Carr, Kenneth, Silviu (5 days,5,5)
Betsy, Chad (3,5)
Aamer (5)

– 1st cool down
target loop filled with gaseous He gas

Cryotarget Performance Test (see E. Beise et al. NIM A378 (1996) 383–391 for a reference of the goals of the target test)

Approximate specs on He coolant gas available from JLab Test Lab CTF fridge, P_{in}=2.5 atm, T_{in}=4.5 K, maximum available mass flow = 5 g/s

There exist theoretical calculations which the cryotarget design is based upon. However, it should be clear to everybody that an obvious reason for running the G^0 cryotarget test is to see the REAL performance. In other words, any promises of exactly how much of the 5 g/s mass flow we need cannot be made in advance. IMMEDIATELY after we have the first experience/data on the heat exchange efficiency etc. we will be able to predict our needs more realistically. Therefore effective communication between the G^0 cryotarget team and the VTA group at the very beginning of the target test period is called for.

– pressure test target loop at 20 K (cold leaks?)

– run target pump at around T=20 K for 1st time (already done at T=77 K)

– check of target monitoring/control

Comment: if something breaks, it must be fixed. Estimated time for repair unknown.

Coolant needs: nominally (5 g/s, 5 days) till we learned our system better

Week 26 Monday June 25th 5 working days

Manpower at JLab: Bob Carr, Kenneth, Silviu (5,5,5)
Betsy, Chad (3,5)
Aamer (5)

– determination of mass flow rate in target loop. Ramp up High Power Heater to around 250 W. Total power on target loop will be around 250 W + 100 W (pump) + 100 W (heat leaks) = 450 W.

– target pump speed studies. Ramping up the pump speed from its lowest 20 Hz to its highest 60 Hz.

Comment: Expect max. coolant consumption.

Coolant needs: (5 g/s, 3 days)

++++++++++++++++++ MONTH of July ++++++++++++++

Week 27 Monday July 2nd 4 working days (because of 4th of July)

Manpower at JLab: Silviu (4)
Aamer (4)

– analysis of measurements

Comment:

Coolant needs: ZERO

Week 28 Monday July 9th 5 working days

Manpower at JLab: Kenneth, Silviu (5,5)
Aamer (5)

– target heat exchanger performance (HX) study. This is really a redundant time request as we should learn about the HX already during the previous test.

Comment: this week's activity might be canceled

Coolant needs: (5 g/s, 2 days)

Week 29 Monday July 16th

Manpower at JLab: Kenneth, Silviu (5,5)
Aamer (5)

– 2nd target performance test?

Comment: if the results from the first test, during which we use the aluminum mandrel in our HX, shows that a 2nd test without the mandrel is necessary, then week 29 will be used for warming up, removing the aluminum mandrel, re–assemble, vacuum leak check the system at room temperature, and cool down again.

Coolant needs: ZERO

Week 30 Monday July 23rd

Manpower at JLab: Kenneth, Silviu (5,5)
Aamer (5)

Comment: 2nd target performance test

Coolant needs: (5 g/s, 5 days)

++++++++++++++++++ MONTH of August ++++++++++++++

Week 31 Monday July 30th

Manpower at JLab: Silviu (5)
Aamer (5)

– analysis of measurements (either HX performance test or the 2nd target performance test)

Comment: Warm up of system

Coolant needs: ZERO

Week 32 Monday August 6th

Manpower at JLab: Kenneth, Silviu (5,5)
Aamer (5)

– target motion mechanism studies at room temperature

Comment: Accelerator Staff requirement – Alignment Crew

Coolant needs: ZERO

Week 33 Monday August 13th

Manpower at JLab: Kenneth, Silviu (5,5)
Aamer (5)

– cool down + start of target motion mechanism studies at 20 K

Comment: Accelerator Staff requirement – Alignment Crew

Coolant needs: 1st a bit more to cool down the system, next only enough to keep the target system at a steady 20 K (only power deposits will be pump motor at 20 Hz and heat leaks); (guess 1 g/s, for <not a guess> 5 days)

Week 34 Monday August 20th

Manpower at JLab: Kenneth, Silviu (5,5)
Aamer (5)

– target motion mechanism studies at 20 K

Comment: Accelerator Staff requirement – Alignment Crew

Coolant needs: (1 g/s, 5 days)

Week 35 Monday August 27th

– we need to run a reliability test on our target system (pump), i.e. run at 20 K for a long period of time. On August 27th we may already have what we would deem sufficient evidence of the target's reliability. However, if we conclude that we do not have enough experience then we need to run the target for a few more weeks at 20 K using as little coolant as we possibly can.

– alternatively warm up

Comment: target test completed

Coolant needs: ZERO

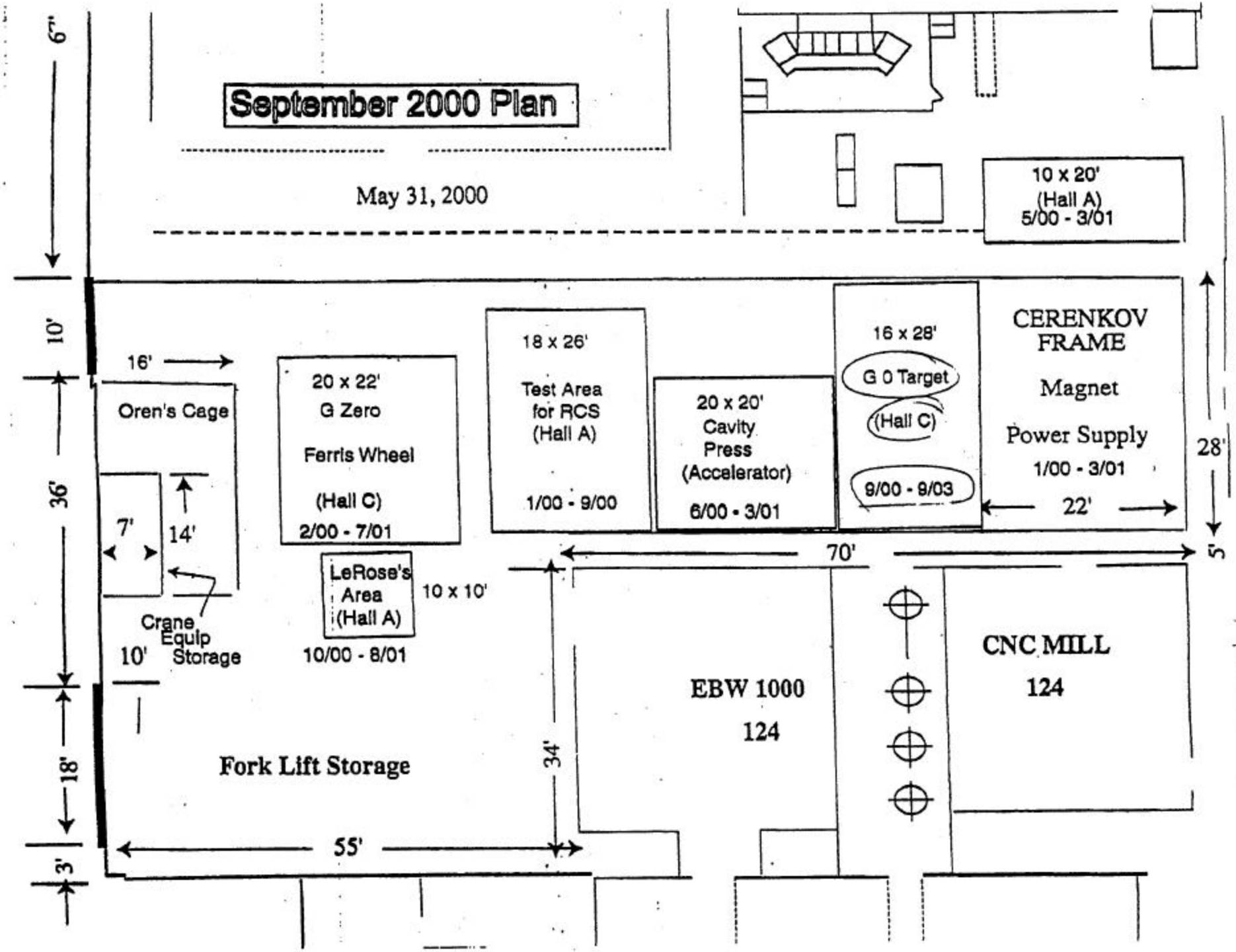

Attachment 2

3¢ TEST CAG 10/2000

POSSIBLE OUTLINE FOR COOLANT LINES

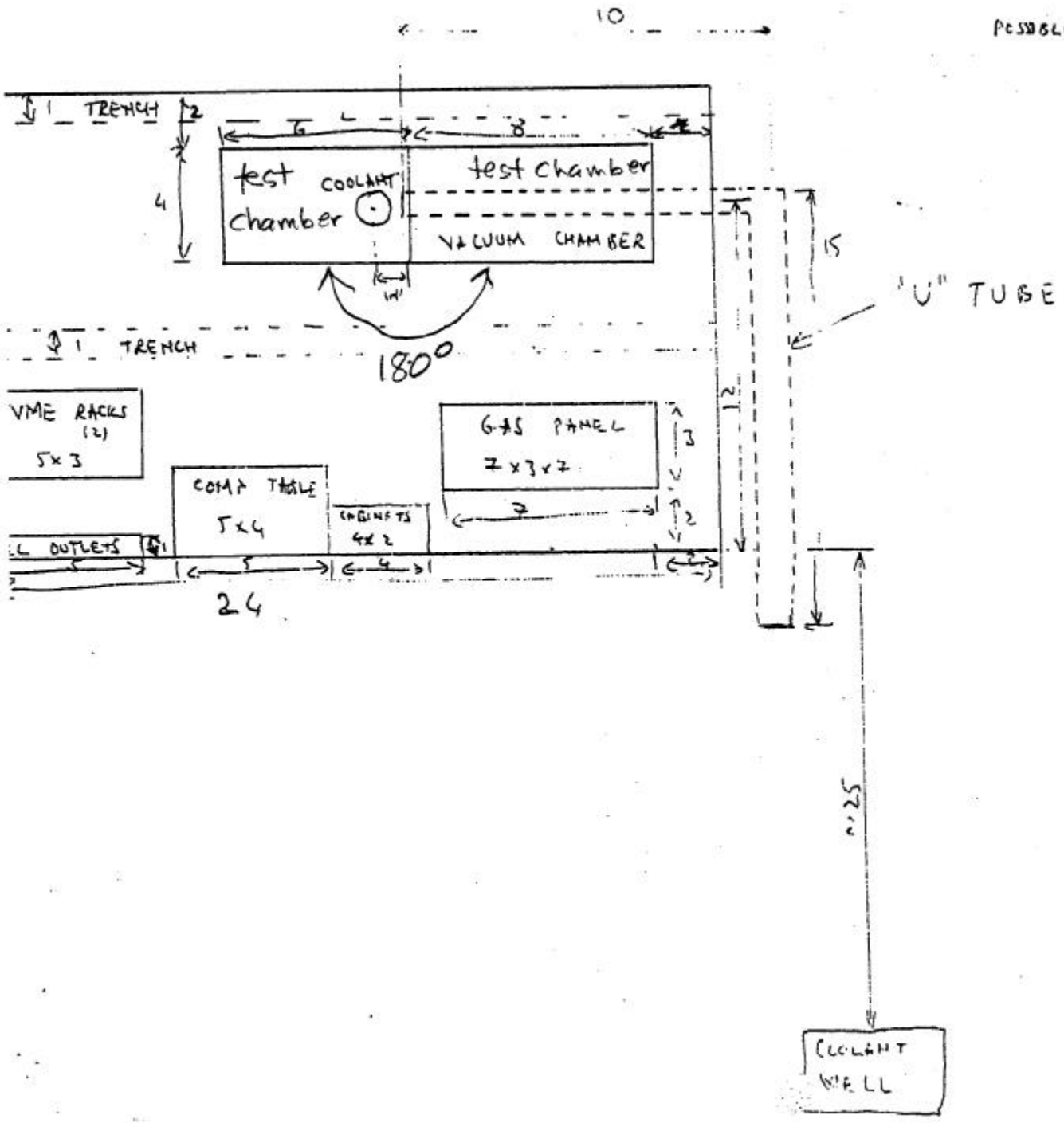

Attachment 3.

K. Gustafsson

VIPORT

TEST LAB AREA OUTLINE 10/2000

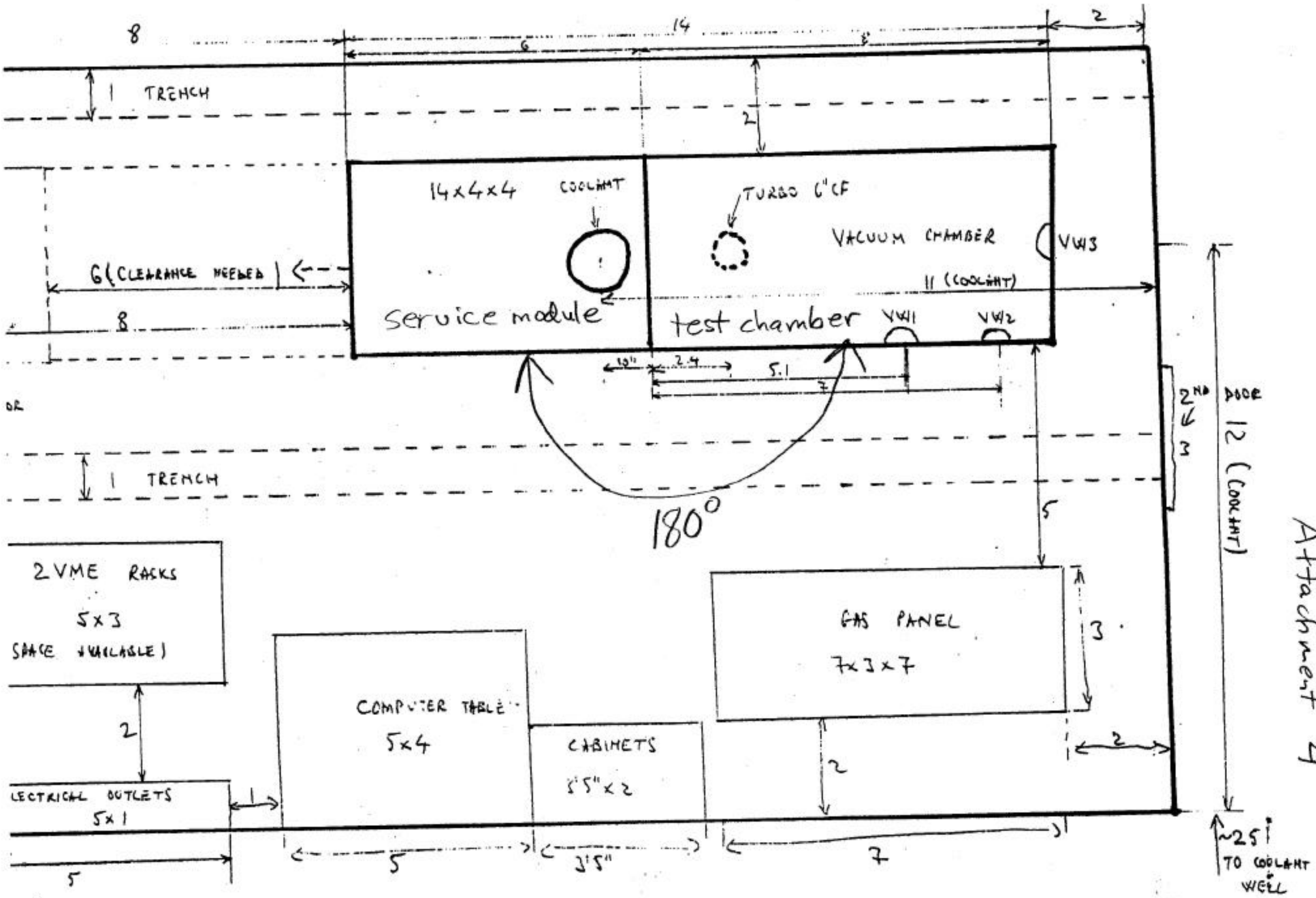

Attachment 4

Attachment 5A

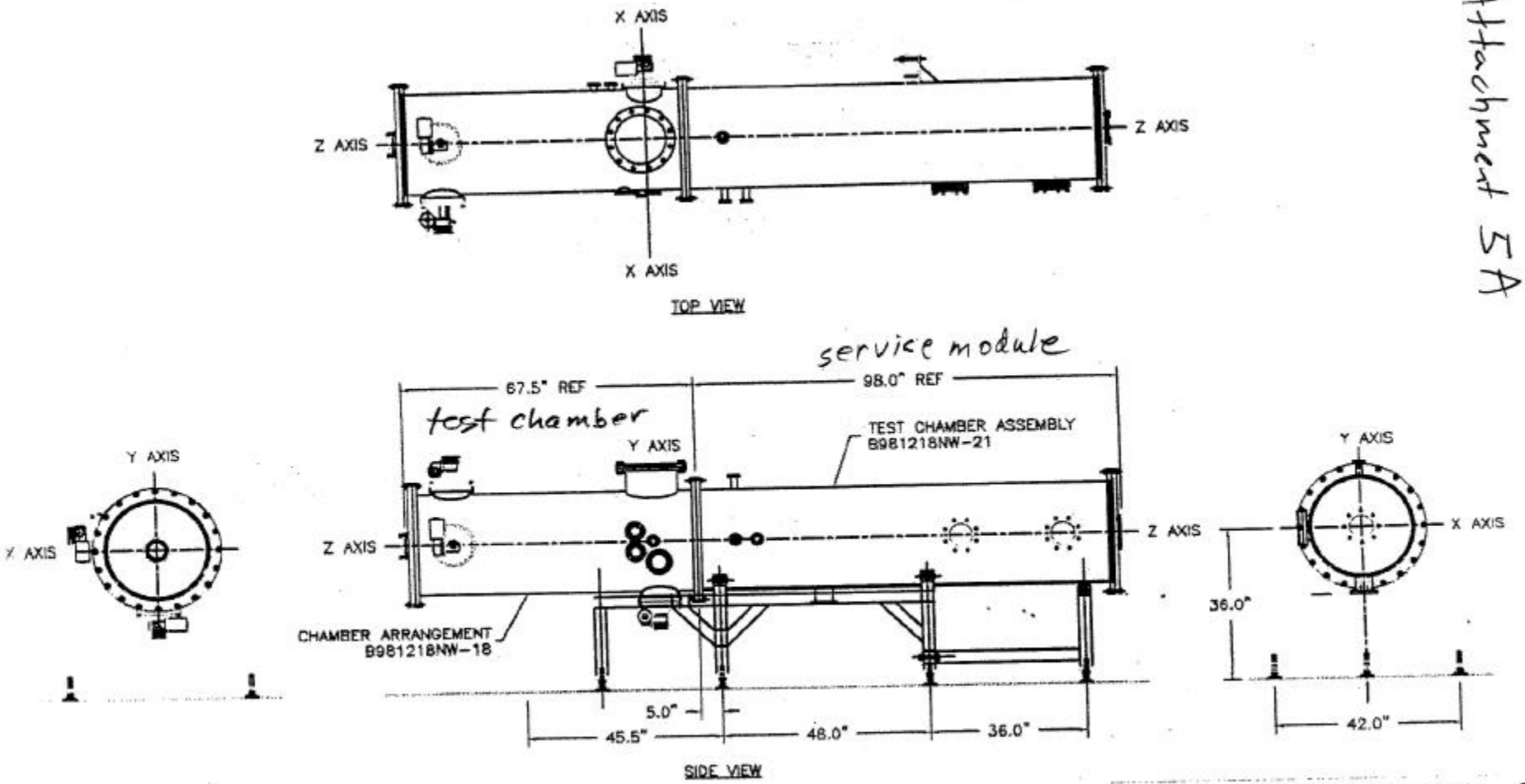

*B981218NW-22

THERMIONICS NORTHWEST, INC.

DRAWN: SDS	NEXT ASS'Y:	SUPPORT STAND ARRAN
DATE: 4/8/00		
CHECKED:		B981218NW-22
APPROVED:	FILE: CA981218	
UPDATE: 10/13/00	BLK: SUPTSTNDARR	MATERIAL:
CHECKED: SDS	CUSTOMER: CAL TECH	NO. REQ'D
APPROVED:	FINISH:	SCALE

Attachment 5B

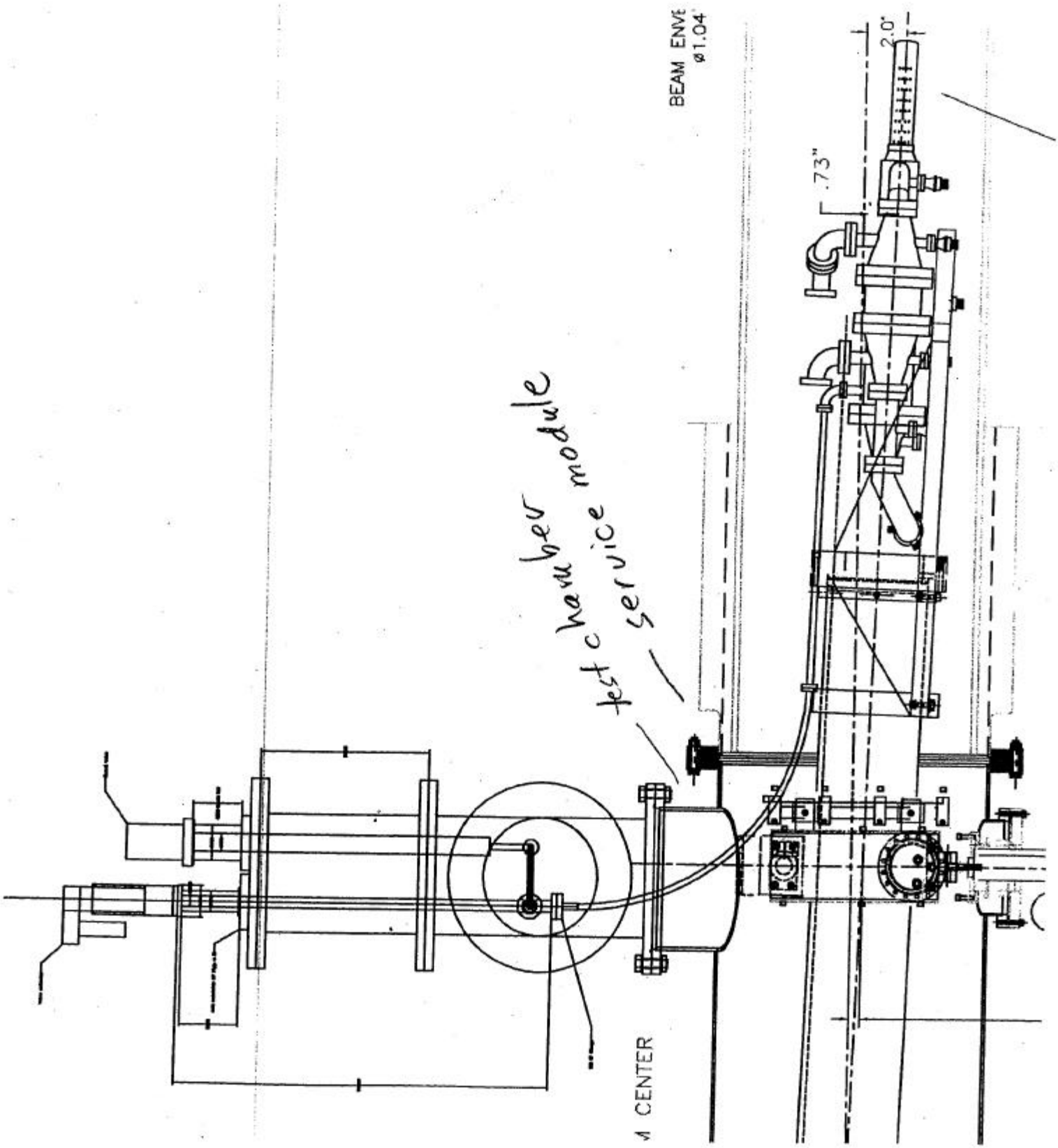

Attachment 6

G^0 Liquid Hydrogen Target Preliminary Design Document
C. E. Jones and E. J. Beise, November 25, 1998

See G^0 Internal Report G0-98-034

Attachment 7

Addendum to Appendix E of the Target Preliminary Design Document
B. Beise and K. Gustafsson, June 5, 2001

See G^0 Internal Report G0-01-050 and, more recently, G0-02-011, which contains a slight correction.

Attachment 8

Pressure Rise in Vacuum Chambers due to Rupture of He Coolant Lines

K. Gustafsson, June 11, 2001

See G^0 Internal Report G0-01-051

Attachment 9

K. Gustafsson
Kellogg Radiation Laboratory
California Institute of Technology
6/12/2001

Oxygen Deficiency Hazard assessment for G0 Cryotarget Test

The volume of the G0 target loop is less than 8 L. During the cryotarget test in the JLab Test Lab we will have cold He gas at 20 K n the target loop. If there were to be a venting event the He gas will be warmed up to room temperature. At room temperature the volume of 8 L would have expanded by a factor of 800 to 6,400 L. The volume of the JLab Test Lab is approximately 1,500,000 ft^3, i.e. 42,475,270 L.

Using the formulas from Page 21 of the JLab ODH Manual:

Resulting Percentage of Oxygen = 21 x (42,475,270–6,400)/42,475,270
= 20.997%

That is, the G0 target test area must be classified as ODH0.

Attachment 10

K. Gustafsson
Kellogg Radiation Lab
5/8/2001

Volume of the High Bay of the JLab Test Lab

(Dimensions are approximate)

Length	273	ft
Width	102	ft
Height	55–60	ft

Volume (on the order of) 1,531,530 ft^3 =~ 1,500,000 ft^3

There are a number of objects in the High Bay area of the JLab Test Lab. The volumes of these objects were neglected.

Attachment 11

The G^0 Target User's Guide (**DRAFT**)
R. Carr, February 4, 2002

See G^0 Internal Report G0-02-023

Attachment 12

Additional Requirements for the Test

1. No hardware configuration changes shall be made that are outside normal operating parameters while the target is cold. This does not apply to the normal, prescribed valve adjustments.

2. No alteration to the venting, relief or safety systems shall be made without prior approval by M. Seely.

Items raised by D. Kashy

1. The plumbing diagram is attached. All but two valves are manual valves which can only be changed at the gas panel. The two pneumatic valves are controlled manually. The main changes relevant to this test are as follows:

   - For this test no ballast tank is used. The ballast tank is already installed outside the Hall C dome and it isn't feasible due to its large physical dimensions to employ it in this test in the test lab. Instead SV13 (adjacent to CV13 in the attached plumbing diagram) will be used to relieve any potential overpressure in the target loop (15 psig set point). Based on our experience with tests of the SAMPLE and SLAC targets, ballast tanks are not especially useful or necessary in controlling pressure oscillations in a He gas system. So initially at least we plan to perform the tests without a ballast tank.
   - The hydrogen circuit will be charged with helium gas instead of hydrogen.

2. The control system is EPICS based. Documentation describing the specifications for the EPICS-based control software can be found at

   `http://www.jlab.org/~beise/g0-exp/TargetControls/EPICS-specs.html.`

   Sue Witherspoon has provided initial control screens accessible through MEDM (see, for example, g0menu.adl at /group/gzero/g0targ/screens on jlabh1). These screens have been made available to the CTF/cryo group (Johnathan Creel & Joe Wilson) and have been successfully run at various locations relevant to these specific personnel. The JT valves, target motion, and heaters can be controlled through these display pages, although for this test they will be controlled manually. System parameters of interest to CTF, such as the coolant supply and return temperatures, can be easily monitored on these control screens.

3. After consulting with Mike Seely on the question of staffing levels, it was agreed that due to the low pressures and non-explosive gases used in this test, 24 hour staffing would not be necessary. Instead the test personnel will reduce the coolant flow at night in order to keep the target cold under minimal power conditions, go home, and resume work in the mornings. This has also been discussed and agreed upon with the CTF personnel. A call list (attached, and) posted in the test cage provides phone and pager numbers of the relevant cryo/CTF personnel. Except for the initial cool down, CTF/cryo personnel will not

be directly involved in this test except in emergency or unusual situations. Beyond that, weekly meetings during the testing period are planned (2pm Fridays in TL 204/205) which should provide the feedback necessary between the target testers and the CTF personnel to insure a smooth testing period for G0 as well as the other customers of the CTF. People attending these meetings will include Joe Wilson, Joe Ozelis, Bob Bennett, a VTA rep., Greg Smith, Betsy Beise, and the Cal Tech contingent.

4. Load sharing with the other CTF users is certainly a concern and is one of the main issues to discuss with the CTF personnel at our planned weekly meetings. Our test schedule will have to be flexible to accommodate the needs of the other CTF users.

5. As mentioned above, there is no ballast tank in the test system.

6. Although it's certainly true that extrapolating the heat exchanger performance from helium gas to liquid hydrogen is not straightforward, just such an extrapolation was done with the SAMPLE target and confirmed experimentally when that target was running with LH2. The attached figure shows the results obtained with the SAMPLE target. Similar calculations as shown in that figure have been made for the G0 target, and are also attached.

7. Joe Ozelis and Joe Wilson have been added to the list of personnel with access to the G0 cryotarget cage, included in the list of names of authorized personnel, and have both been given keys to the target cage. However, their interaction will most likely be through the "run coordinator" for these tests, Kenneth Gustafsson, or his designate.

8. A sign will be posted on the outside of the test cage informing people how to contact the test coordinator (Kenneth Gustafsson or his designate) in case any need arises off hours. Contact phone and pager numbers are also posted inside the test cage.

Attachment 13

Call List

Name	work Ph	Pager	Home Ph
G0 Test Cage	5804		
Test Coordinator Contact	cell: 810-7698		
Kenneth Gustafsson	6754		626-395-4276
Silviu Covrig	6754	757-269-6754	757-269-6754
Bob Carr			626-395-4583
Bob McKeown			626-395-4316
Aamer Rauf	7346		
Betsy Beise	7194		301-405-6109
Chad Galley			
Greg Smith	5405	881-0646	565-9883
Allison Lung	7446	888-5133	875-1779
Sue Witherspoon	7579	820-9487	
Bert Manzlak	7556	875-6458	
Bob Bennett	7656		
Joe Wilson	7058	888-7604	
Joe Ozelis	7647	820-6517	
Rao Ganni	7245		
Mike Seely	5036	881-1194	833-7890
Dave Meekins	7440	872-2442	874-4750
guard gate	4444/5822		

Value positions for running with He gas in test lab.

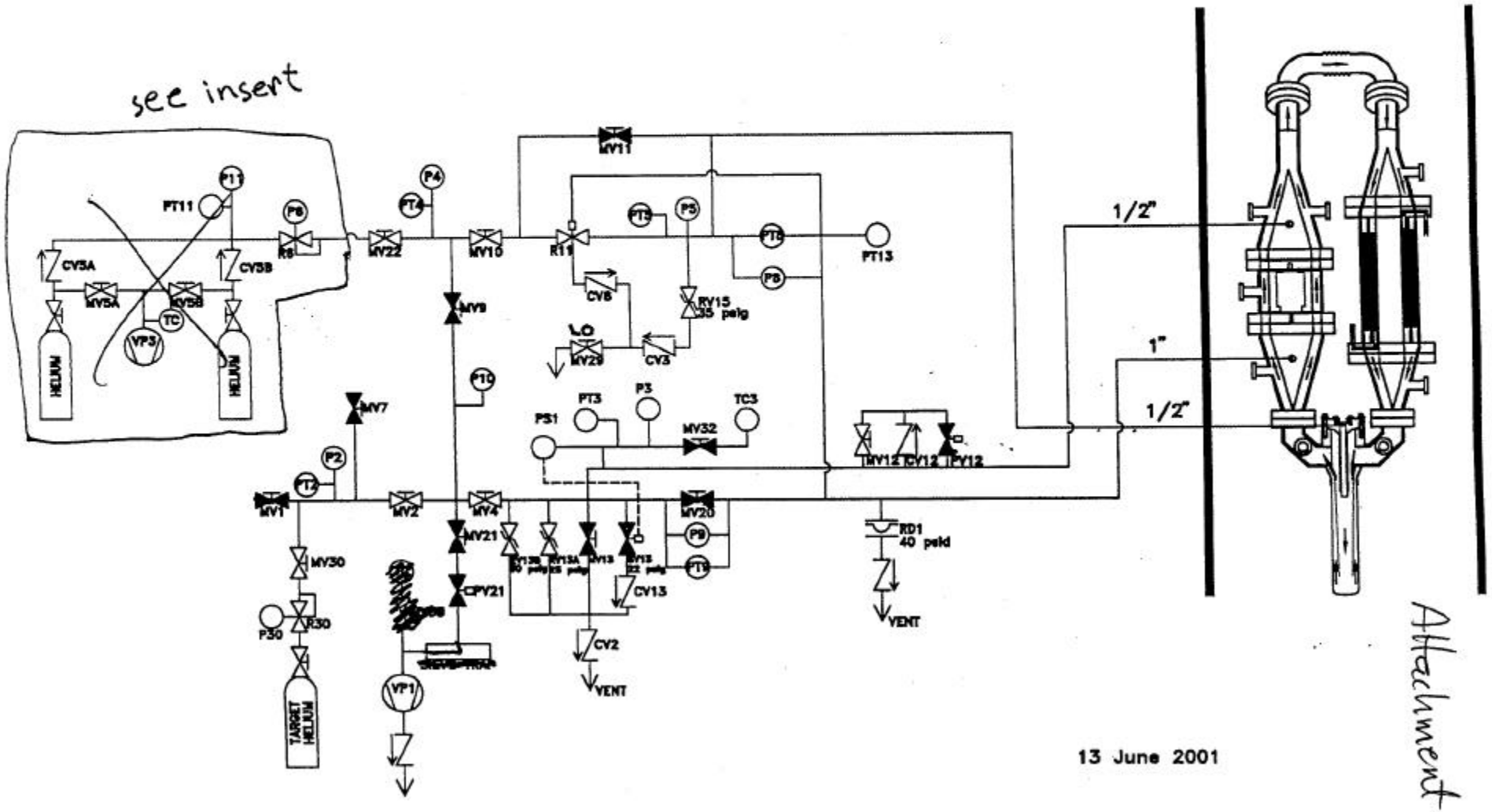

Attachment 14A

Attachment 14B

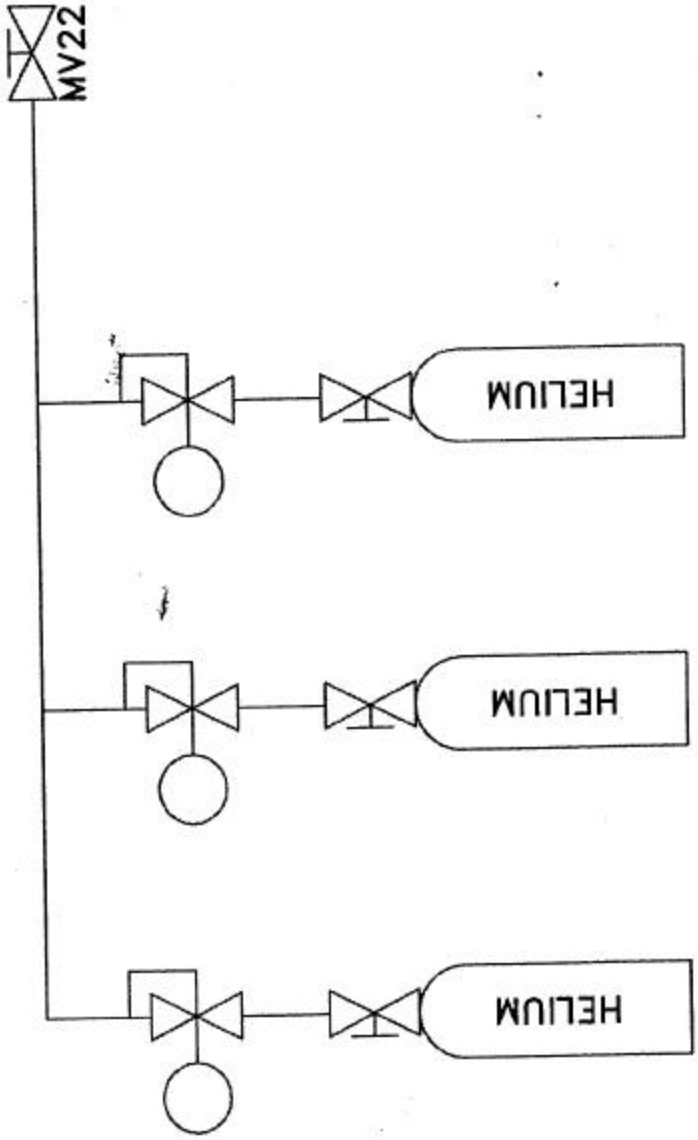

Attachment 15A

Measured Performance of the SAMPLE Target

NIM A378, 383 (1996)

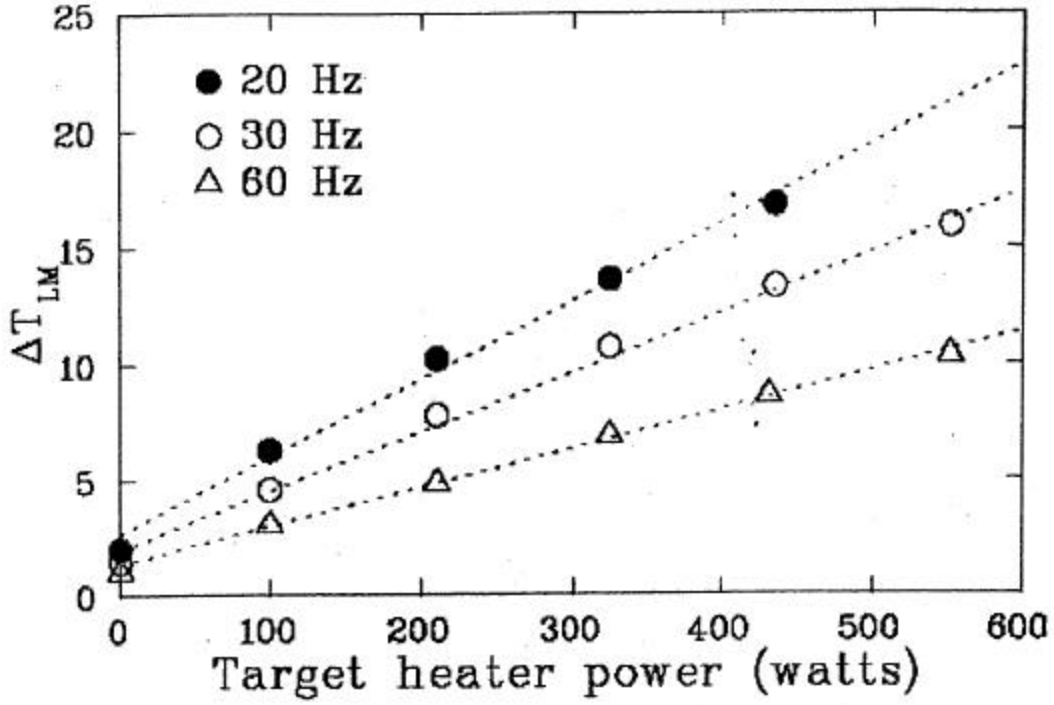

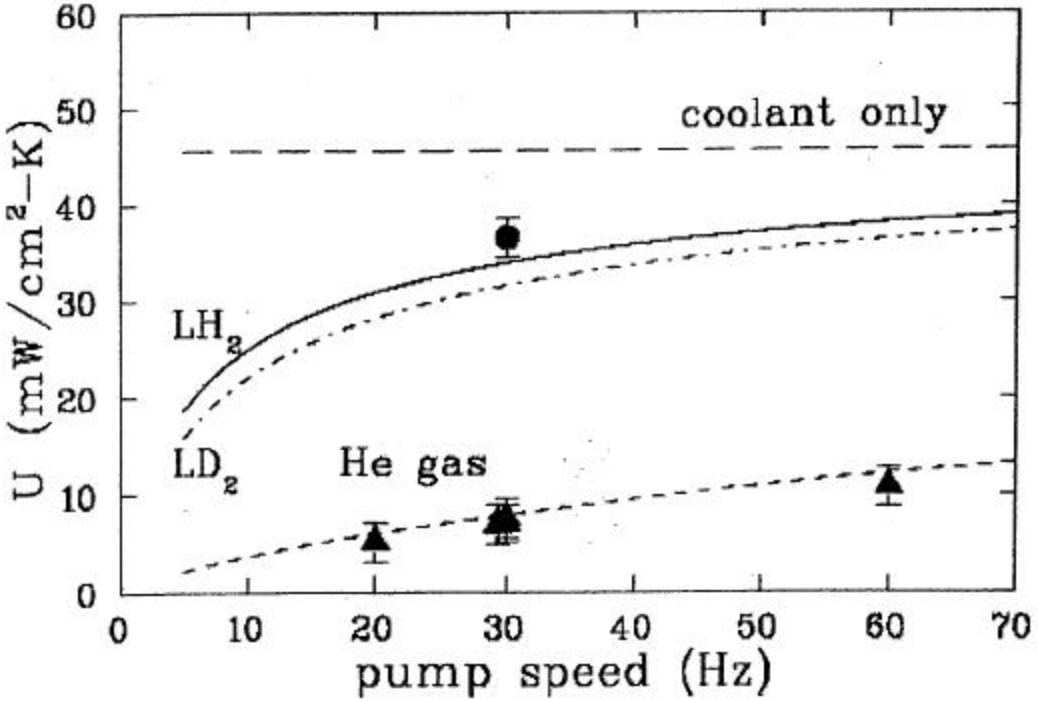

Predictions for Test Lab

Test #2

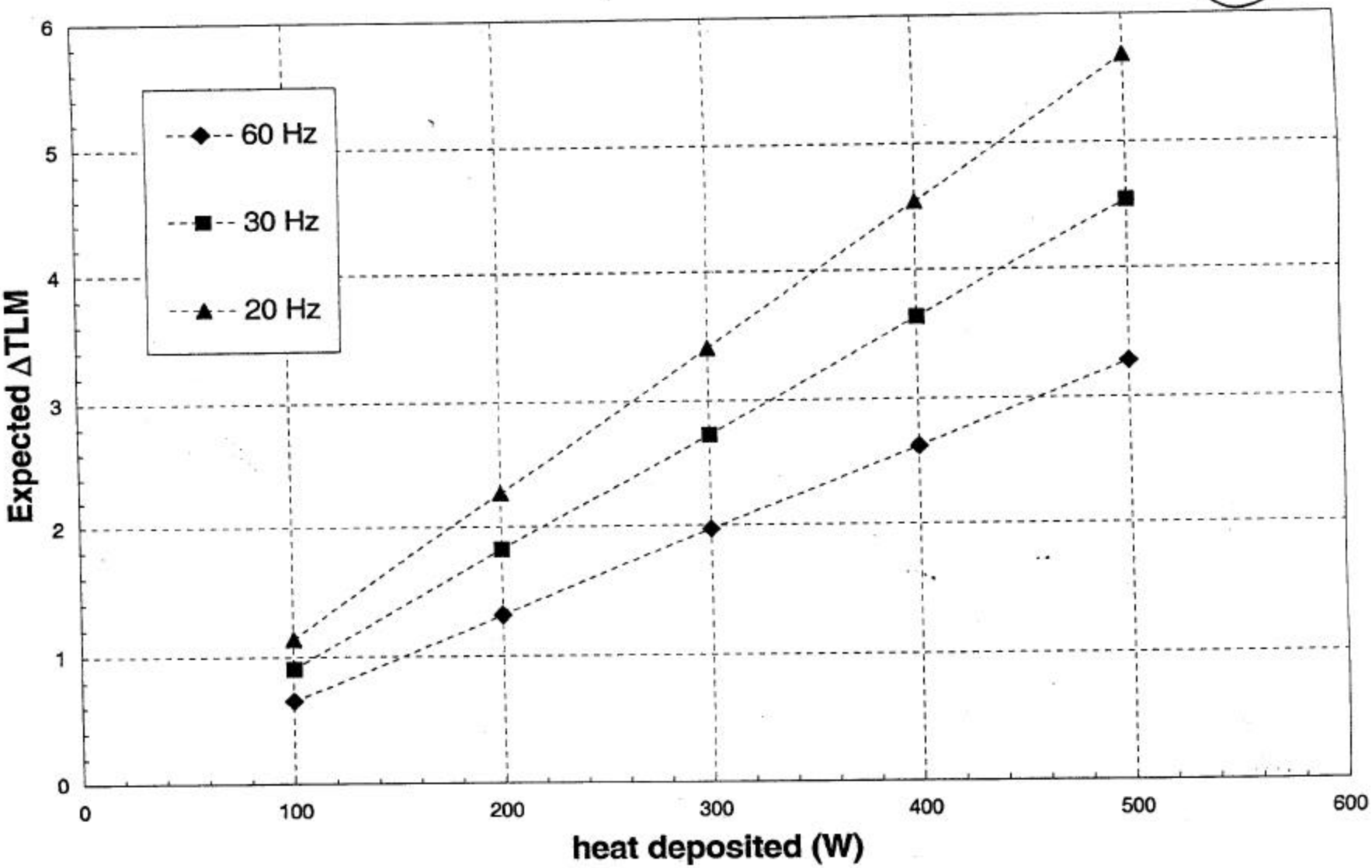

Attachment 15B

Predictions for ~~Heat~~ Test lab

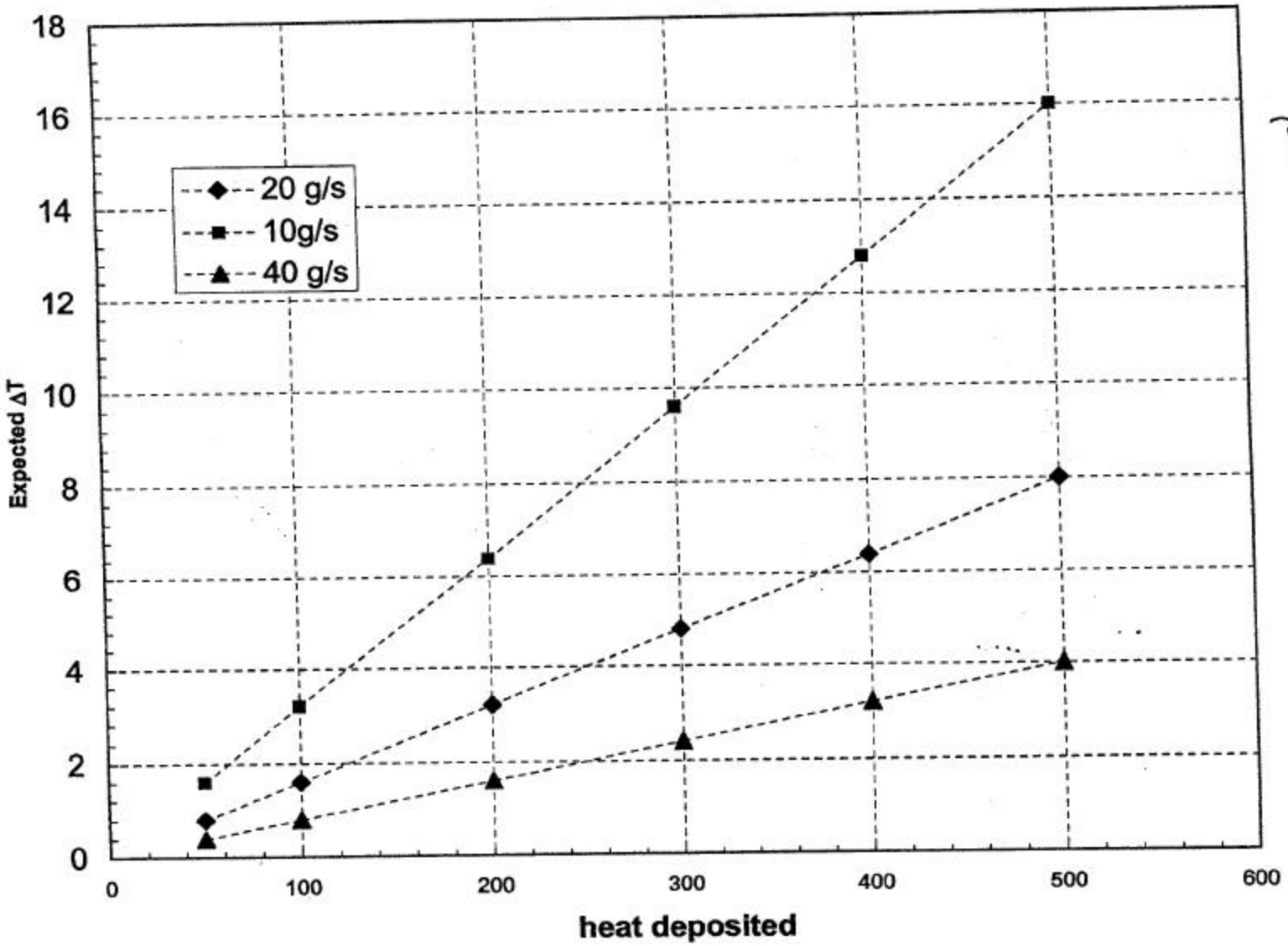

Test #1

Attachment 15c

PREDICTED Performance for Test Lab

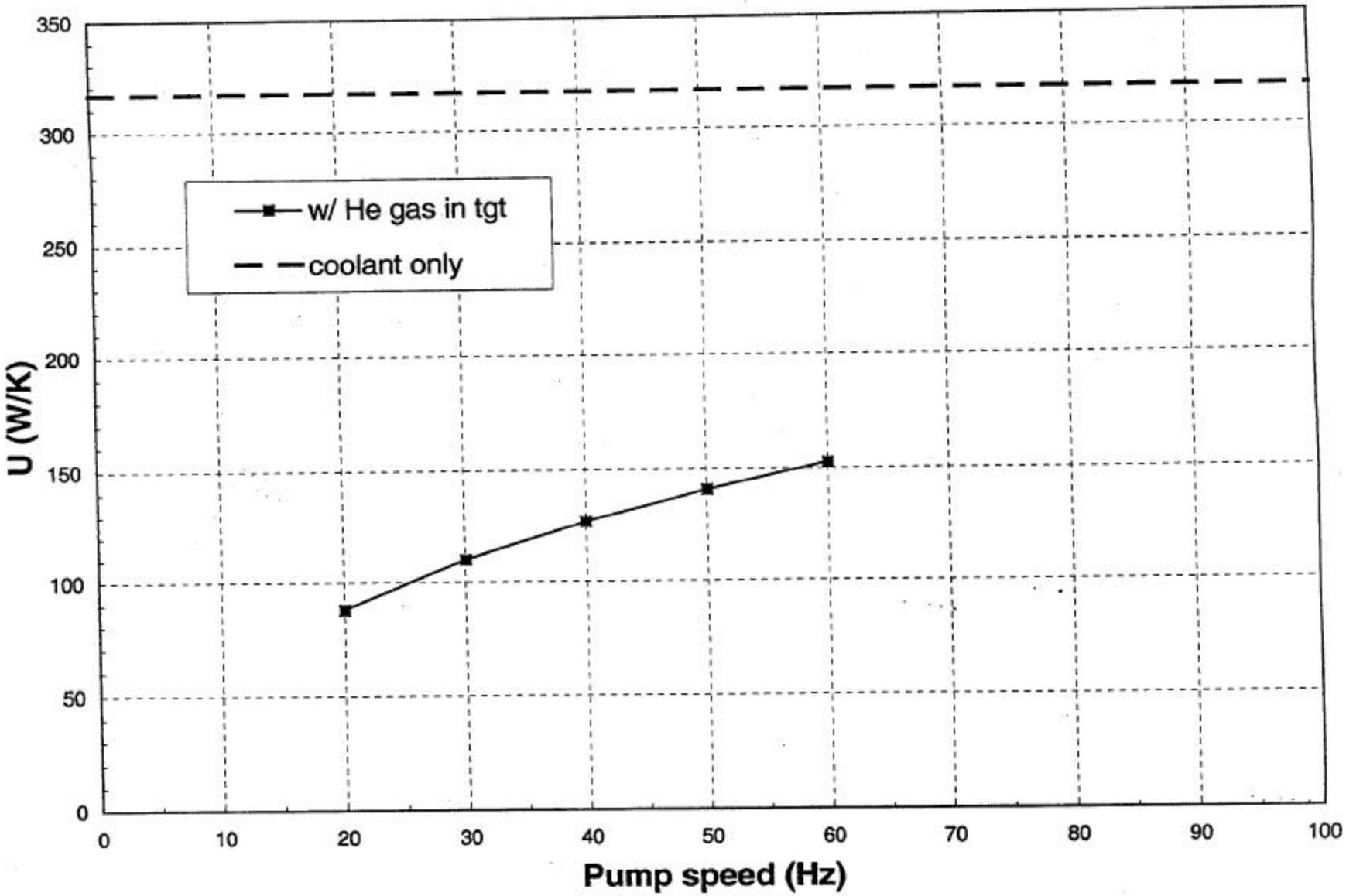

Attachment 15.0