Operational Safety Procedure (OSP)

Division serial number _____

Issue Date:	
Expiration Date:	
Title: **G0 Superconducting Magnet System**	
Location: **Hall C**	
Risk classification (See EH&S Manual Chapter 3210.)	Without mitigation measures:
	With specified measures implemented:
Author(s): **Steven Williamson, Andy Kenyon, Kazutaka Nakahara, and Damon Spayde**	

Supplemental technical validations:	
Hazard reviewed: Reviewer	Signature:
Engineering:	
Cryogenics:	

Approval	Signature
EH&S staff reviewer:	
Division EH&S officer: Dennis Skopik	
Department or group: Rolf Ent	
Safety Warden: Walter Kellner	

Distribution:
Copies to: affected area, authors, division EH&S officer, EH&S Reporting Manager.
(After expiration, forward original to the EH&S Reporting Manager for archiving.)

1. Purpose

This Operating Safety Procedure (OSP) is written to define the conditions for safe operation of the G0 Superconducting Magnet System (SMS) in Hall C at Jefferson Lab (JLab). This OSP is meant to address safety issues associated with the apparatus either as it is normally configured for running with beam or as it is configured when off-line between G0 runs. It is not meant to cover special safety issues associated with the installation, special one-time tests, unexpected repairs, or the turn-around. For those operations, refer to the appropriate Temporary Operating Safety Procedure (TOSP). The G0 SMS is the central component of the G0 experiment, a measurement of the parity-violating asymmetry in elastic electron scattering from the proton, which has as its goal the isolation of the s quark contributions to the overall charge and magnetization densities of the nucleon. Other major components of the G0 apparatus include the liquid hydrogen cryotarget, the detection system, the data acquisition electronics, the beam diagnostic hardware, and the Hall C infrastructure (utility supply, cabling, shielding, etc.). The procedures for safe operation of those other components can be found elsewhere and will only be discussed here in relation to the operation of the SMS.

2. Description

For the purposes of this OSP, the operation of the G0 SMS can be divided into 5 interacting subsystems: the vacuum system, the liquid helium (LHe) and liquid nitrogen (LN2) cooling circuits, the power supply and associated cold and warm power buss, the low-conductivity water (LCW) cooling circuit, and the programmable logic controller (PLC) based control system. These subsystems will be described separately below.

2.1 Vacuum System

When the G0 experiment is configured to accept beam, the vacuum extends without interruption from the accelerator injector to the downstream dump window. Valves located at the up-stream end of the target and the down-stream end of the exit beam line allow the volume associated with the magnet, target, and exit beam line to be isolated. With these valves closed, the experimental apparatus can be disconnected from and moved (to beam left) off of the beam line. It is the vacuum system associated with the target/magnet/exit line, between the up- and down-stream valves, that will be discussed here.

The volume under vacuum between the two valves can be estimated by adding up the following sub-volumes:

- The main stainless steel cylindrical magnet cyrostat shell, of length 2 meters and inside diameter 3.8 m, which contains the magnet cold mass. The volume of the main vessel, excluding the volume of the cold mass, is estimated to be 16.73 m^3.
- Aluminum end caps covering the ends of the shell, each penetrated by a beam-line pipe of length 0.72 m and inside diameter 0.60 m. The total volume of the pipes is 0.40 m^3.
- The magnet cryobox containing liquid nitrogen and helium reservoirs. The total volume of the 0.90 m diameter, 1.29 m long, cryobox volume, including the volume of the "transition box" which connects the cryobox to the main vessel, and excluding the volumes of the helium and nitrogen reservoirs, is 0.82 m^3.
- The target service module, which is mounted on the up-stream end-cap beam-line flange and which contains the target and its positioning mechanism. This cylindrical volume of length 1.66 m and inside diameter 0.60 m has a volume of 0.46 m^3. Note that we do not

consider the rather large 4-way cross mounted on the target service module though we have also not estimated the volume occupied by the target itself. To first order, these volumes approximately cancel.

- The exit beam line including the small volume of the closed downstream gate valve. The length of this volume is 3.91 m and the inside diameter is 0.59 m resulting in a volume of 1.07 m^3.

The total volume between valves is estimated to be 19.27 m^3.

Eight trapezoidal holes, each of area 0.51 m^2 on the down-stream end-cap are covered with 0.020-inch thick titanium. During the G0 experiment, these so-called "exit windows" provide a path of low energy loss and multiple scattering for particles emanating from the target toward the detectors.

A 1000 l/s turbo pump mounted on the pump-out port below the magnet evacuates the main vacuum volume. Its effective pumping speed at the top of the pump-stack is estimated [Ke01] to be between 300 and 500 l/s, depending on the gas being pumped. A second pump 1000 l/s turbo pump is mounted n the down-stream end of the exit beam line. Additional uninstrumented pump-out ports are located on the magnet vessel shear-pin port (also below the magnet), the target service module 4-way cross.

Pressure (vacuum) is measured by a thermocouple gauge mounted on the shear-pin port at the bottom of the magnet (the "Vessel TC" gauge), by a thermocouple gauge located on the cryobox (the "Cryobox TC" gauge), by a cold-cathode gauge mounted at the "0º" port on the top of the magnet vacuum vessel, and by a cold-cathode gauge mounted at on the shear-pin port. The first Vessel TC gauge and Vessel Cold Cathode gauge are readout and logged by the control system. Under normal conditions, when the magnet is warm a vacuum in the low 10^{-5} Torr range is achieved. When the magnet is cold, additional cryopumping and the elimination of most outgassing reduces the pressure to the low 10^{-7} Torr range.

During the commissioning of the G0 SMS, a small vacuum leak was discovered in the outer wall of the LN2 supply female bayonet. To eliminate the effects of this leak, a special seal was fabricated and installed at the end of the bayonet the annular space around the bayonet (normally filled with a mixture of liquid and gaseous nitrogen at about 3 atm). A mechanical vacuum pump (a scroll pump) was installed on the magnet platform to evacuate the annular space. A thermocouple gauge, logged by the control system, monitors the vacuum in the annular space.

2.2 Cryogenic Cooling Circuits

The G0 SMS is a toroidal magnet consisting of 8 superconducting coils in a single cryostat. The coils are cooled by LHe flowing in 4 parallel paths, each of which includes two coils in series. Two additional parallel cooling paths are used to cool the superconducting electrical buss, through which power is supplied to the coils in series. An LN2 shield surrounds the cold mass, which consists of the coils, cold buss, and collimators. The LN2 shield is cooled by 8 aluminum tubes, which are clamped to the outer cylindrical surface, and to up- and down-stream aluminum support rings. The upstream and downstream faces of the LN2 shield, as well as the inner beamline shield tube are cooled by conduction from the outer surface through the aluminum support structure. Cryogens are fed to both the LHe and LN2 circuits via manifolds at the bottom of the

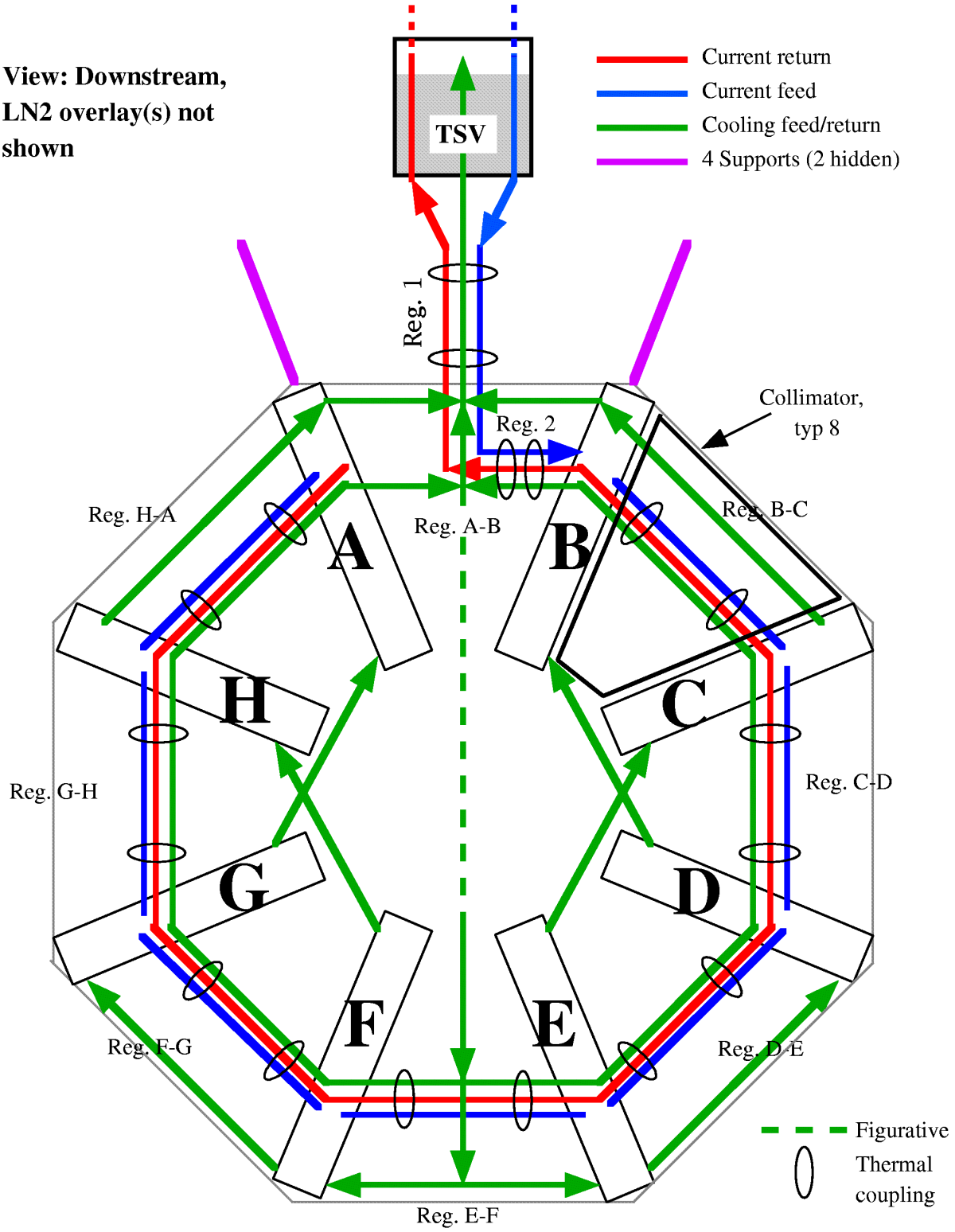

Figure 1. A block diagram of the LHe circuit.

magnet from reservoirs located in the control dewar at the top of the magnet. Plumbing at the upstream end of the magnet makes the connection from the reservoirs to the manifolds. A schematic diagram of the LHe cooling circuit is provided in Figure 1.

Normally, the magnet is cooled by thermal siphon flow. Cryogens introduced at the bottom of the magnet from the reservoirs percolate back up to the reservoirs through the cooling circuit, losing density and absorbing power on the way. Gaseous cryogens are exhausted and replaced by fresh liquid as determined by a control system PID loop which maintains the liquid levels in the reservoirs.

During cooldown, through the appropriate manipulation of cryogenic valves in the control dewar, it is possible to cool the magnet using forced flow. In this mode, cryogens are introduced directly into the manifolds from the cryogen supply. The connections between the cryogen supplies and the reservoirs are closed. The reservoir drain valves, a manually operated plug valve in the case of the LHe circuit, and a check valve in the case of the LN2 circuit, are closed. In forced-flow mode, cryogens returning to the reservoirs are not recycled through the magnet. A detailed diagram of the G0 cryogenic plumbing [Me02] is available from the Hall C engineering group.

The temperature of the cold mass and LN2 shield is monitored by an array of thermal sensors, which are read by the control system. Each coil is instrumented with a pair of platinum resistance thermometers (PT-102) for the range from about 30 to 300 K and a pair of ruthenium-oxide (ROX) sensors for the range from 4 to 25 K (see Figure 2). Four PT-102 sensors are mounted on the lead and the aluminum components of four of the eight collimators (for a total of 16 collimator PT-102 sensors). Two CERNOX sensors monitor the temperature in the 4 to 300 K range of lead and aluminum components of two of the collimator modules (see Figure 3). PT-102 and ROX sensors also monitor the supply temperatures, and the temperature at the inlet and outlet of

State	Description
LN2 Cooldown	Begin forced-flow cooling of LN2 circuit.
Cooldown I	Forced-flow cooling (or warm-up) of LHe circuit using gas provided by CDHXR via JT-2. Inlet gas temperature to be changed by no more than 1 K/hr. Gas exhausted via warm return.
Cooldown II	Cooldown of LHe supply line through reservoir fill (JT-4) and exhaust through warm return. Plug valve closed.
Cooldown III	Forced-flow cooldown of SMS (plug valve closed) with gas from LHe supply and exhaust through warm return.
Cooldown IV	Cooldown of cold return line by reverse flow through cold return line and exhaust via reservoir through warm return.
Run Mode	Fill reservoir with LHe produced by JT cooling at JT-4. Cool magnet in thermo-siphon mode. Exhaust gas returned through cold return.
Standby Mode	Magnet at LN2 temperature. LN2 system in thermo-siphon mode. LHe system cooled by 80 K helium from CDHXR in forced flow mode

Table 1. Standard states of the cryogen circuits.

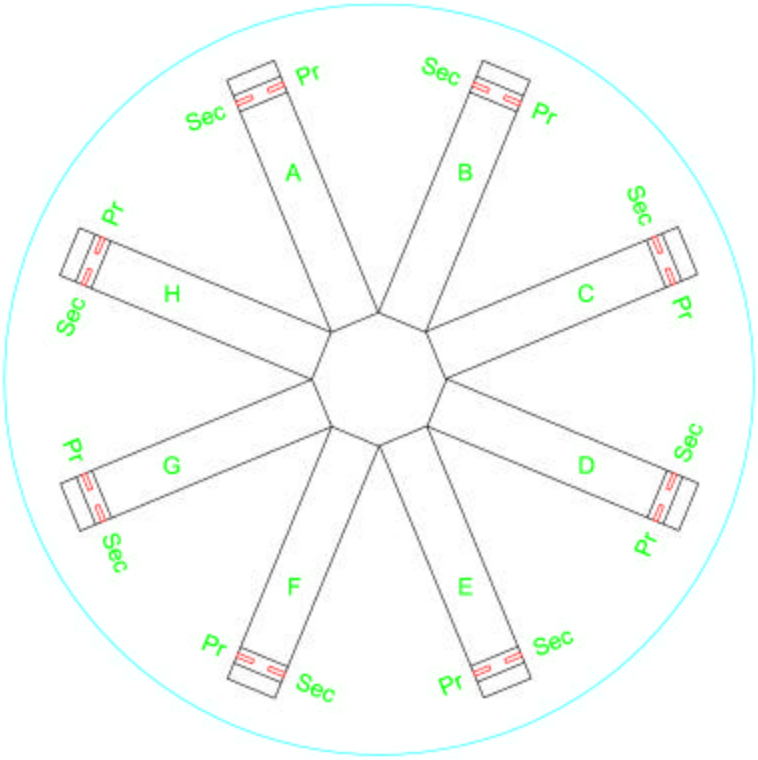

Figure 2. ROX and PT-102 coil temperature sensors as seen from the upstream end of the SMS. Pr indicates primary, Sec indicates secondary sensor.

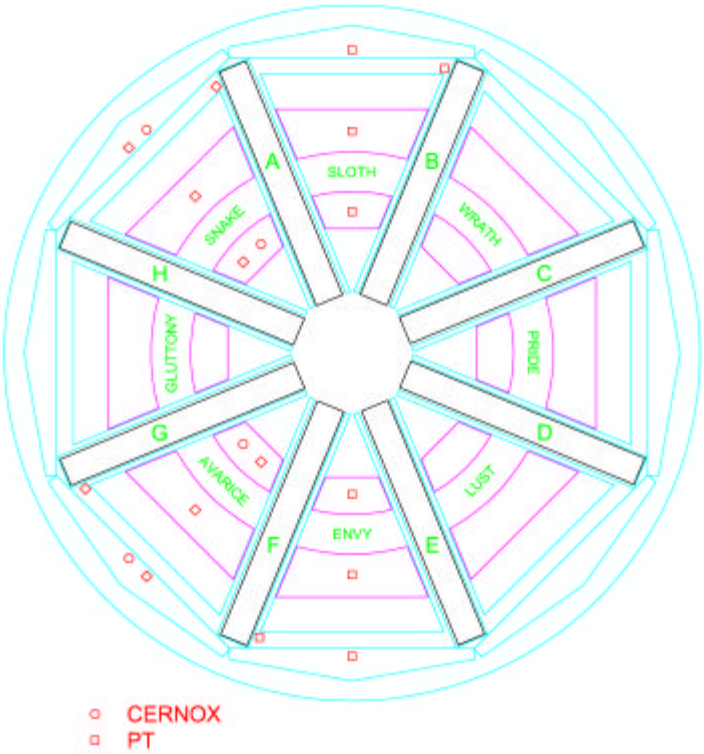

Figure 3. Temperature sensors on the collimators.

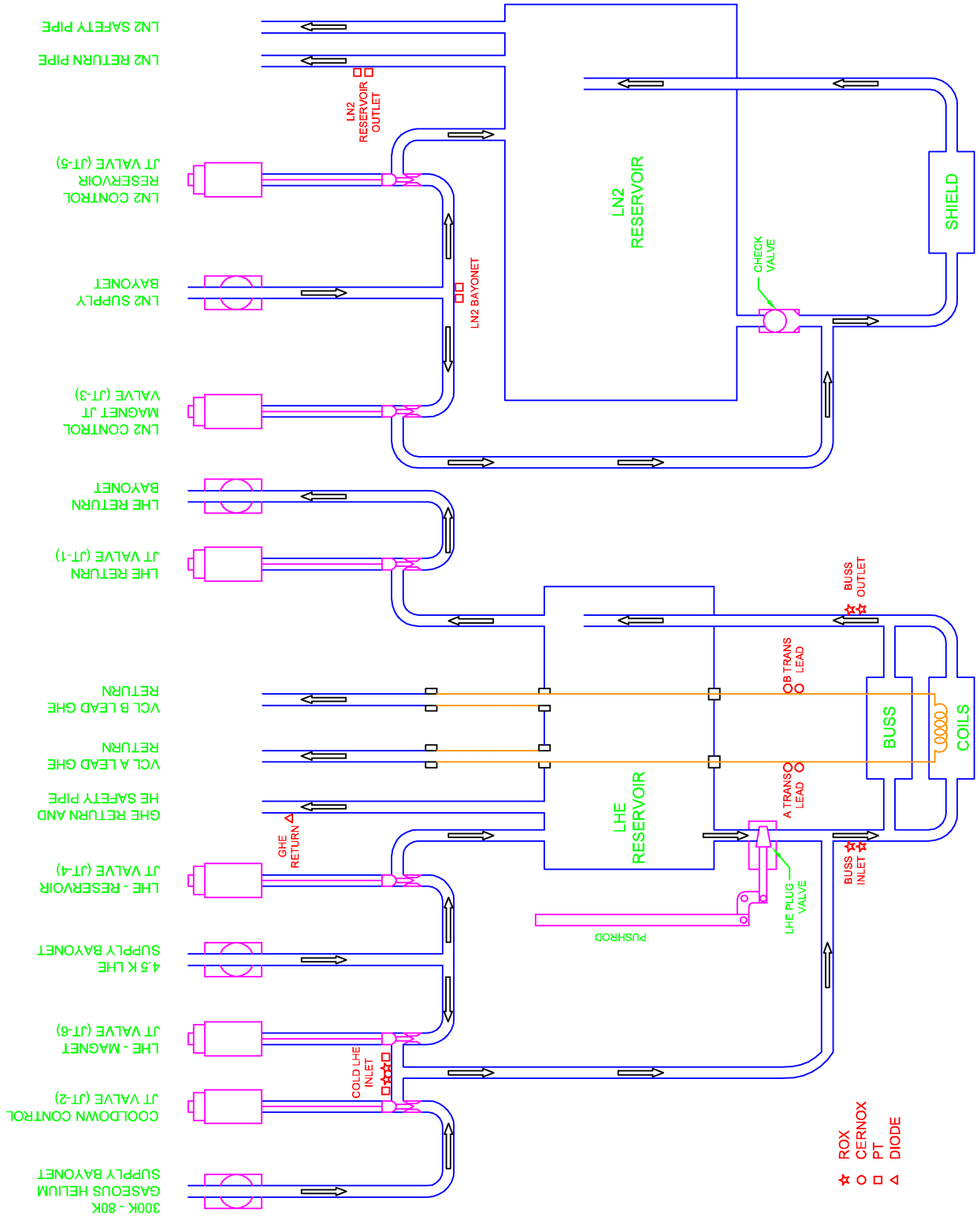

Figure 4. Temperature sensors on the cryogen plumbing and electrical buss.

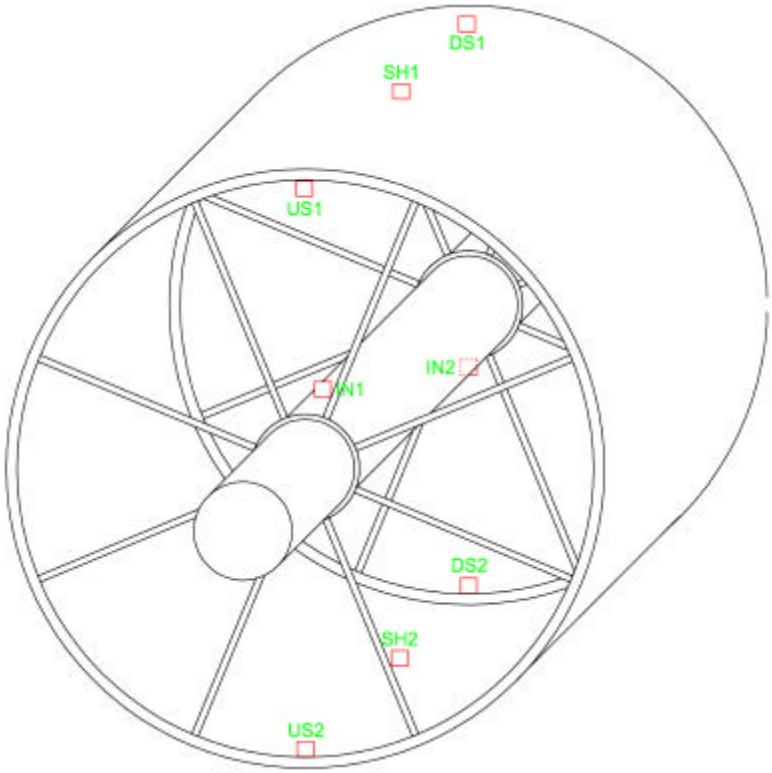

Figure 5. PT-102 temperature sensor locations on the LN2 shield. A pair of sensors (primary and secondary) is located at each of the eight indicated points.

the electrical buss as shown in Figure 4. Finally, eight pairs of PT-102 sensors provide the temperature at various points on the surface of the LN2 shield (see Figure 5).

The cryogen system can assume a number of useful configurations depending on the settings of the cryogenic valves. These states are listed in Table 1 and sketched in Figure 18. The details of the procedure for cooling the magnet are given in §5.3. In order to avoid thermal shock during especially in Cooldown I mode, the magnet temperature is reduced slowly from room temperature to about 100 K. This is accomplished by introducing helium gas of variable temperature at a flow of about 10 g/s. The gas temperature is adjusted by regulating the proportion of room temperature helium that is mixed with gas cooled by a LN2 heat exchanger (CDHXR). The temperature of the gas supplied to the magnet is constrained by a control system PID loop to remain at no more than 75 K below the average temperature of all coils and to fall at a rate of no more than 1 K/hr.

2.3 Electrical Circuit

A block diagram of the SMS charging circuit is shown in Figure 6. Current is provided by a Dynapower 8000 A silicon-controlled-rectifier (SCR) based supply, jumpered for 20 V output. Its architecture supports bi-directional power flow allowing the magnet to be both charged from and discharged to the utility power grid. This feature is used to provide a “slow-dump” function whereby the magnet current is zeroed by a powered discharge in 900 s. A “fast-dump” capability is provided by a high-speed circuit breaker (manufactured by Scheron SA and rated at 6000 A

and 1 kVDC) and an air-cooled high power resistor (a Post-Glover resistor rated at 250 volts, 5000 A with a resistance of 0.05 Ω). Quench detection, as well as a number of safety-related conditions will result in the initiation of a fast dump. In that event, the fast dump switch, normally closed, opens to disconnect the power supply from the magnet. The stored energy of the magnet, 6.6 MJ at full excitation, is then dissipated by the dump resistor with a decay time of 10.6 s [Lv00]. A zero-field current transducer (ZFCT) is employed to measure the current supplied to the magnet and to provide feedback to the power supply for current regulation. The ZFCT was originally housed within the power supply enclosure and measured the total output current of the supply. With the dump resistor and magnet wired in parallel the precise measurement and regulation of the magnet portion of the current required that the ZFCT be relocated to a point in the circuit after the dump switch and dump resistor.

All interconnections between room-temperature components of the circuit are made with either 600 or 1000 MCM flexible water-cooled cable. The water cooling circuit will be described in greater detail in §2.4. Power connections to the superconducting buss are made via vapor cooled leads (VCLs). These are designed to tolerate a 900 s slow dump after a complete interruption of coolant flow. Each lead consumes 1.8 l/hr/kA of LHe. The flow of coolant gas is regulated and measured by flow controllers interfaced to the control system. A cold electrical bus, consisting of lengths of integrated superconductor clamped to one side of a square stainless steel cooling channel, connects each coil in series. In order to cancel the field from the cold bus, the current is returned along a path, which parallels the supply path. This arrangement is illustrated in Figure 1.

Each coil consists of 144 turns of integrated superconductor wrapped in two double-pancakes. There are, therefore, 4 layers of superconductor each made up of 36 turns. Three voltage taps, two on the coil leads, and one at the interconnection point between double pancakes, provide a

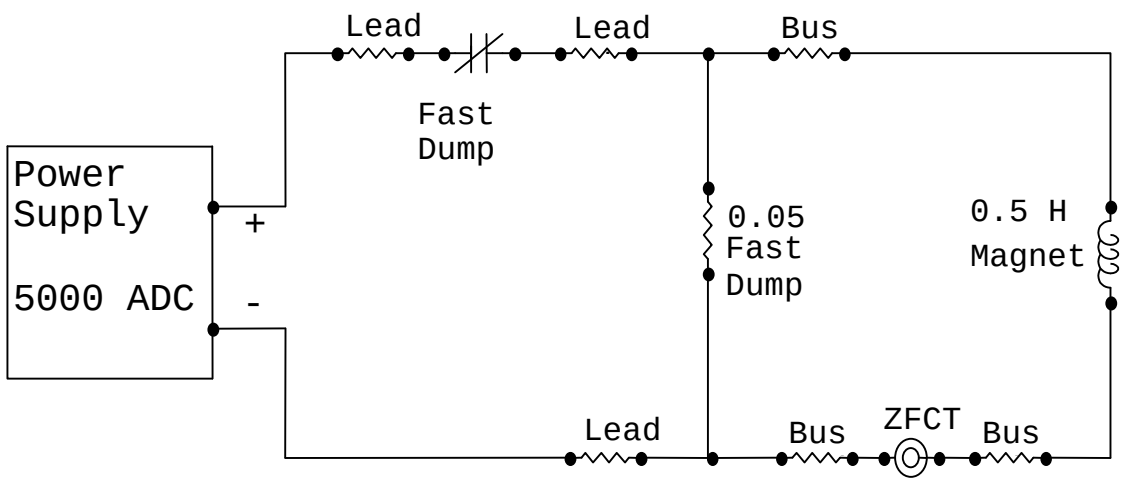

Figure 6. Functional block diagram for the G0 SMS charging circuit.

measure of the coil voltage for the quench-detection systems. In addition, voltage taps are located on the incoming “transition leads” on the cold side of the VCLs within the LHe reservoir, and about midway between the VCLs and the first coil connection. Finally a diagnostic voltage

tap is made at the halfway point on the long return of the cold buss after the last coil. Each voltage tap is isolated by a 10 kΩ resistor mounted on the coil.

Quench detection is provided by two parallel systems, a digital PLC-based system and a hard-wired analog system. Both systems are designed to be insensitive to inductive voltages produced during ramping and to provide detection of quenches, not only in the coils, but also in the transition leads. The digital quench protection system is considered a "backup" for the analog system.

The digital quench detection system is shown in Figure 7. It employs isolation amplifiers each connected through nominal 5 kΩ isolation resistors across a pair of voltage taps on coil leads or center taps. The amplifier outputs, proportional to the coil voltages, are fed to analog inputs of the PLC. The PLC compares each voltage to an average voltage derived from all of the outputs. If the deviation is greater than a set threshold, typically around 200 mV, the quench protection system is triggered to generate a fast dump. In addition, a series of thresholds are defined for the transition lead voltages, and a fast dump is triggered when the highest is exceeded.

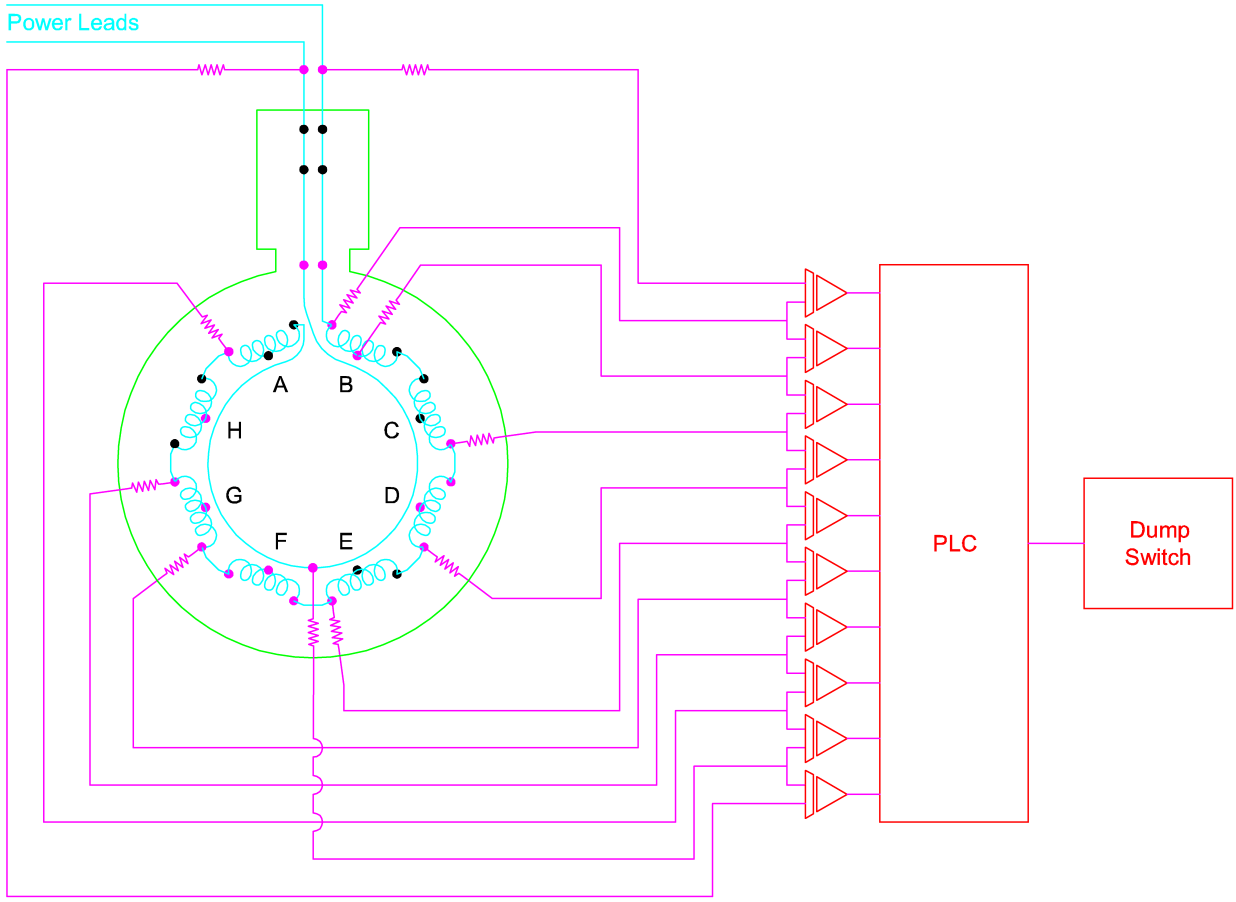

Figure 7. A schematic diagram of the digital quench protection system.

The isolation resistors are known to occasionally break due, probably, to thermal stress during cooldown and warm-up of the magnet. Black points in Figure 7 indicate taps, which are currently inoperative due to broken isolation resistors. In order to check for broken resistors, small cur-

rents are supplied by batteries in series with the inputs of each of the isolation amplifiers. This "offset" current produces an offset voltage (subtracted by the PLC) when the isolation resistors are present. No offset voltage then indicates a broken isolation resistor (or a disconnected cable).

The analog system follows a design developed for the CDF [Dr99] and D0 [Ha98] experiments at FermiLab. The magnet forms one half of a bridge circuit as depicted in Figure 8. A resistor chain spanning the power-supply connections provides the other half. The voltage across the bridge, between the center tap of the magnet and the center of the resistor chain, will be zero if the magnet center tap indeed divides the magnet resistance in half. A single quench within the magnet will imbalance the bridge. Isolation amplifier/window discriminator channels, shown in Figure 9, sense the imbalance at a threshold of about 350 mV, allow a normally open relay to open, and thus trigger a fast dump.

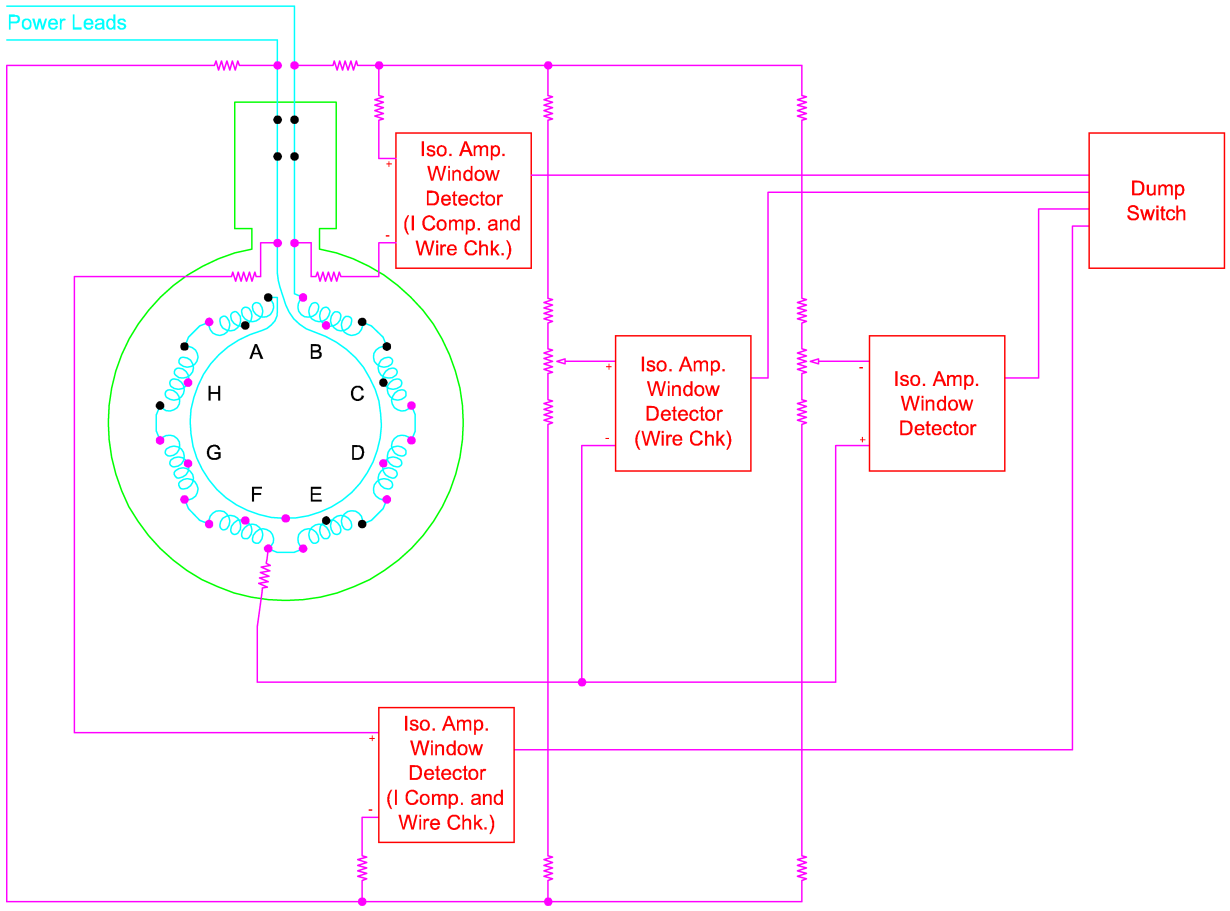

Figure 8. Connections of the analog quench protection system to SMS voltage taps.

Included in each discriminator channel is circuitry for checking cable and isolation resistor integrity. A small offset current is routed through the wires of the cable, the isolation resistors, and the magnet. With the cable integrity check enabled, this current results in a 5 V offset after the isolation amplifier, at the inputs to comparators for the window discriminator, rather than zero. The thresholds for quench detection are also centered at 5 V. Any open or short circuit in a channel's cable will produce the same effect as a quench. For redundancy, two bridges and two

isolation amplifiers are used to detect quenches in the coils or leads. Only one of the isolation amplifiers carries out the cable integrity check, however.

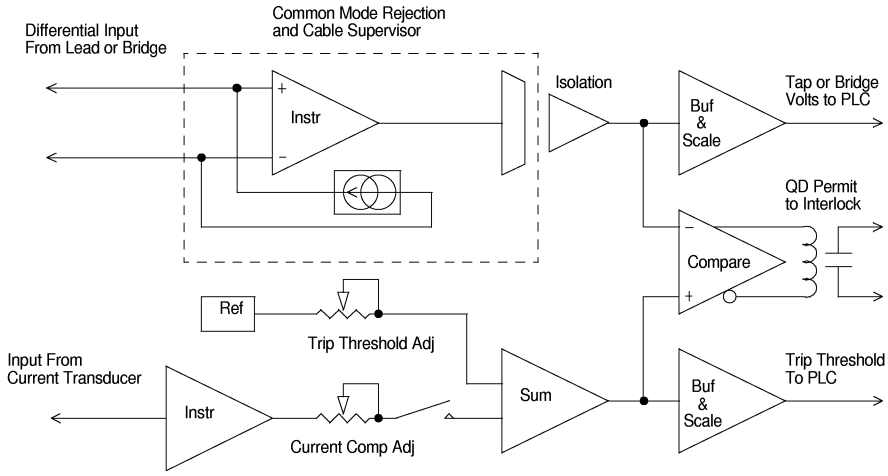

Figure 9. A simplified diagram of an isolation amplifier/window discriminator channel.

A second pair of discriminator channels is devoted to quench detection in the transition and vapor cooled leads. A voltage signal provided by the ZFCT is used to define the window-discriminator threshold in a way that compensates for the voltage, which develops across the resistive piece of the vapor cooled leads.

2.4 Low Conductivity Water (LCW) Circuit

Flexible water-cooled conductor, produced by Flex-cable, is used to interconnect the room-temperature components of the charging circuit. The power supply also requires water cooling for its SCRs, diodes and transformers. Water provided by the Hall C LCW system is distributed to four parallel circuits, which cool: the power supply, each of the 100-foot-long 1000 MCM lead cables running from the supply to the magnet, and the short 600 MCM “jumper” leads between the dump switch, dump resistor and power supply. The temperature, pressure and flow of the return fluid in each circuit are monitored by the control system. Lower limits are defined for temperature and flow, which produce alarms and in extreme cases cause intervention by the control system. The temperature of the magnet leads at their connection to the magnet is monitored by the control system. Manual valves are provided to permit the water in the magnet leads to be drained should the water near the magnet be in danger of freezing. A schematic drawing of the LCW system is shown in Figure 10.

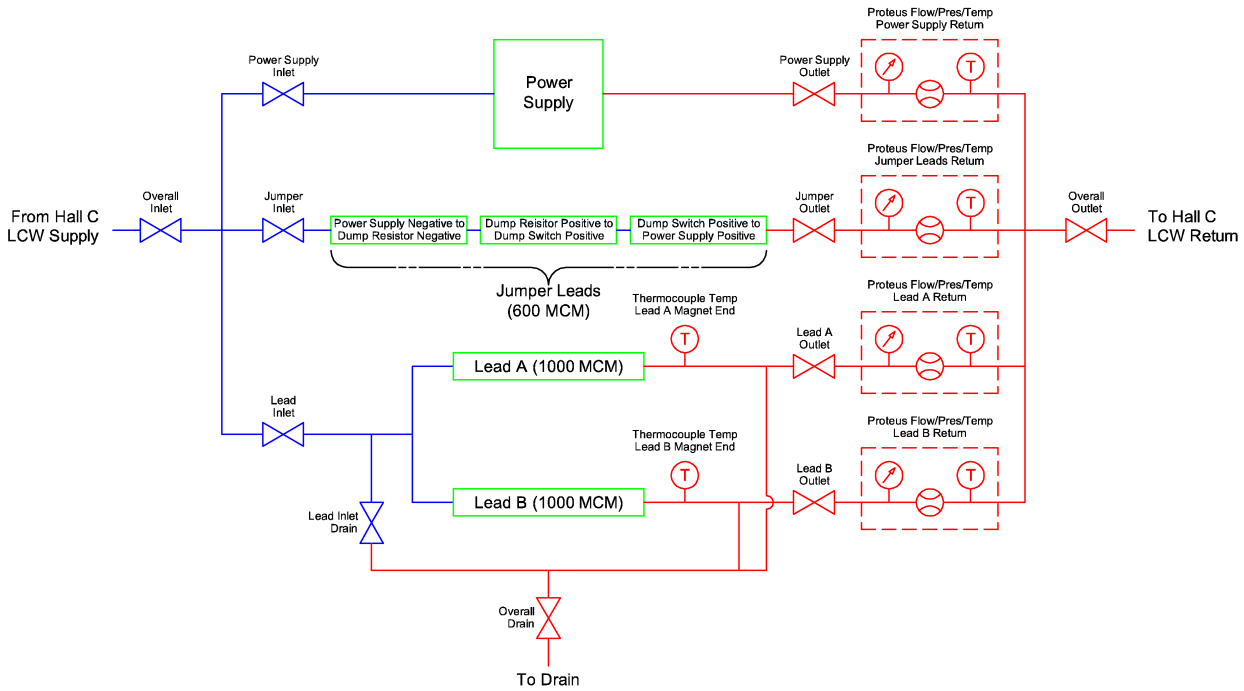

Figure 10. A schematic drawing of the LCW circuits for G0.

2.5 Control System

The control system consists of three principle subsystems: 1) signal processing electronics, 2) the PLC and its "ladder logic" software, and 3) the console (user interface) PC and the software that runs on it. The control system occupies three racks located behind the shielding wall in Hall C.

The signal processing electronics, provides conditioned (level shifted, gain adjusted, isolated, etc.) signals from sensors associated with other subsystems of the SMS to the analog and digital inputs of the PLC and, in the exceptional case of resistance thermometers, to the console PC. It also provides the necessary conditioning to interface analog and digital outputs from the PLC to actuators and external controls. For the most part, the signal processing electronics is packaged in modular DIN-rail-mounted components.

A PLC is a special-purpose microprocessor optimized for process control applications. The G0 SMS control system uses a Direct Logic DL405 PLC manufactured by Automation Direct. Modules provided by the manufacturer for digital and analog input/output are used to interface to the outside world. The PLC is programmed using relay ladder logic, a language that is not unlike assembly language of conventional microprocessors. The ladder logic program is executed in a loop over and over again. The minimum response time of the PLC is therefore the loop time, which for the SMS control system, is about 25 ms. The analog inputs of the PLC are multiplexed so that a single ADC reads eight analog inputs. A single input for such a multiplexed ADC is read on each cycle through the ladder logic program. Multiplexing therefore further increases the PLC response time to analog inputs by a factor of 8 to about 200 ms. The PLC interfaces via the signal processing electronics to devices which measure cryogen pressure; cryogen reservoir level; LCW temperature, pressure, and flow; VCL gas flow; strain in warm-to-cold

supports; coil and transition lead voltages; power supply parameters; cryogenic valve position; and vacuum. The PLC can set the cryogenic valve position, the VCL gas flow, the power supply current and on/off status, the dump switch position, and the cold-cathode vacuum gauge on/off status. The PLC also serves as a repository for information from the console PC. This includes temperatures from resistance thermometers provided by the console PC temperature monitoring process and operator-set parameters provided by through the operator-interface program. With these capabilities, the PLC provides the following functions:

- Analog inputs are scaled to "engineering units" and stored as IEEE floating point numbers.
- Scaled analog values are compared to operator-set levels and alarm indicators are latched when a level is passed.
- Based on alarm indicators and digital inputs, interlocks are set which may initiate a fast or slow dump.
- Cryogenic valve (JT valve) actuators are adjusted according to operator-set target positions.
- The power supply current is adjusted based on an operator-set current and ramp rate.
- Gas flow through the VCLs is adjusted based on operator set values or automatically based on current.
- Cryogen level and cooldown (or warm-up) is controlled using PID loops.

The third component of the control system is the console PC. This Windows 2000 PC has three main functions.

1. It serves as a development station for the ladder logic program running on the PLC. A powerful graphical programming and debugging system (DirectSoft32) allows one to create and document the PLC program, store it on local disk, download or upload it from the PLC via Ethernet and run it on the PLC. There is no direct programming interface to the PLC; all programming is carried out through the console PC.
2. The console PC also runs a dialect of the National Instruments human-machine-interface program called LookoutDirect. Using screens created with LookoutDirect, one can monitor the status of analog digital signals, alter operator-settable parameters in the PLC, command the PLC to perform control procedures and display the logged history of PLC acquired data. Screens are for the following specific areas of the G0 SMS: alarm control, CDHXR, interlocks, JT valve control, VCL control, LHe level, LN2 level, LHe and LN2 cryogen circuit status, power supply control, quench protection, setpoints and levels, strain monitoring, temperatures, vacuum, and LCW monitoring. Some examples of these Lookout pages can be seen in Figures 14, 15, and 16. Figure 14 is of particular interest because it displays the interlock chains used to perform fast and slow dumps. Logged data is stored in compressed form by LookoutDirect and is available to any Microsoft Open Database Connectivity (ODBC) compatible application (including Excel) via the Citadel ODBC driver.
3. Resistance thermometers used to measure cryogenic temperatures are interfaced to the control system using eight-input temperature controllers manufactured by Lakeshore. Those devices provide temperatures to the control system through a serial interface. Six such controllers are used to allow 48 temperatures to be read out. There is not a convenient method to connect and read the serial outputs of the temperature controllers directly at the PLC. Instead, the Lakeshore controllers are initialized and read-out by a process on the console PC,

which simply transfers temperatures from serial inputs on the PC to PLC memory via Ethernet.

3. Authority and responsibility

The authority for operation of the G0 SMS and its associated sub-systems carried by the G0 SMS subsystem manager, Steven Williamson, as defined in the G0 Management Plan [Lu98] and the Memorandum of Understanding (MOU) between the University of Illinois and Jefferson Lab [Le02]. The responsibility for safely operating the magnet has been delegated by the subsystem manager to the trained and qualified personnel listed in Appendix A. This list of G0 SMS Experts may include members of the G0 collaboration, employees of UIUC and the JLab Hall C engineering and technical staff. Unless otherwise specified, all operations described in this OSP may be performed by individuals whose names appear in Appendix A. Under certain conditions, permission will be given to G0 collaboration members to perform specific operations using the G0 SMS control system. For example, during running, shift crew members will be given permission to adjust the magnet current. The mechanism for granting permission will be the password security built into the control system operator interface.

4. Hazard Analysis and Control

Personnel and equipment safety hazards are associated with the operation of the G0 SMS. Without hazard controls, accidents involving serious injury, costly property damage, and loss of time are likely to occur. However, if engineering and administrative hazard controls are implemented, the probability and consequences of accidents can be reduced the level of acceptable if not negligible risk.

In general, all who are involved in the operation of the SMS must have completed all certification and training required for work in Hall C (Radiation Worker, ODH, and EH&S training and the Hall C walk-through), must be familiar with the current Experimental Safety Assessment Document (ESAD), if one is in place, and must have signed the Conduct of Operations (COO) appropriate to the current state of Hall C. Because the G0 SMS interfaces intimately with the G0 Target, workers should be familiar with the G0 Target OSP.

In the following sections, the hazards associated with each of the SMS subsystems are discussed. The likelihood and the consequences of each hazard are assigned according to the criteria in [EHSa]. Controls for mitigating the hazard and their effect on the risk is estimated.

4.1 Vacuum System Hazards

The principle hazard associated with the evacuation of the G0 SMS vacuum vessel and target service module arises from the possible failure of one of the exit windows. A secondary hazard is the possibility of damage to the target cell should the magnet vacuum be released while the cell is evacuated.

4.1.1 Exit Window Hazards

Two scenarios can be envisaged for vacuum window failure.

a. **A sudden complete failure of an entire window.** Given design calculations [Ba99a], the results of destructive testing [Ba99b], and approximately one year of safe operation of the G0

exit windows under vacuum, the likelihood of spontaneous catastrophic failure of a window is estimated to be very unlikely to occur, i.e. Likelihood Code A [EHSa]. When the windows are exposed, that is, when the detector support system (the Ferris Wheel) is pulled away from the SMS, catastrophic failure caused by impact of a large heavy object is somewhat more likely (Likelihood Code B). The height of the windows above the hall floor implies that objects heavy enough to rupture an entire window would be suspended from the crane or elevated using a man-lift. Hazard controls, which cause heavy objects to be maintained at a safe distance from the window, should reduce the likelihood of catastrophic failure to Likelihood Code-A level.

The consequences of catastrophic failure are severe. There would be major property damage and the possibility of serious to fatal injury. Thus, a Consequence Level of IV is assigned to this occurrence. The Risk Code, according to Table 3 of [EHSa], is therefore 3 without hazard controls and 1 if hazard controls are implemented.

b. **A puncture of a window.** Experience during the destructive testing of the windows showed that the 0.020-inch titanium window material is extremely tough. Never the less, with sufficient momentum, it is possible for a sharp object to make a hole in a window under vacuum. Tests showed that such a hole does **not** propagate to generate scenario 1 described above. Instead the vacuum is simply lost at a rate compatible with the conductance through the hole. Such an event is very unlikely to occur (Likelihood Code A) when the SMS is mated to the Ferris Wheel because the windows are completely covered and protected by the bulk of the detectors. When the Ferris Wheel is pulled away, however, a puncture is “likely to happen given sufficient time”, Likelihood Code C, unless hazard controls are implemented, in which case a Likelihood Code of A would be more appropriate. The risk of injury due to window puncture is very low. Equipment damage would also be minimal. The greatest cost would be associated with window replacement. A Risk Code of 2 is assigned to this event, according to Table 3 of [EHSa], without hazard controls. If hazard controls are implemented the Risk Code falls to 0.

Both of these scenarios will be mitigated to Risk-Code-1 level if the following administrative procedure is followed. A region, “the vacuum keep-out zone”, within 2 m down-stream of any point on the face of the down-stream end-cap of the SMS shall be defined (see Figure 11). Whenever a distance greater than 0.25 m separates the SMS and Ferris Wheel from the nominal running distance for a period greater than 10 minutes, the access to the vacuum keep-out zone shall be roped off. Only authorized personnel whose names appear in Appendix A shall be permitted to work in this region. Crane and man-lift operations, unless carried out by authorized personnel whose names appear in Appendix A, shall be excluded from a volume extending vertically from the roped-off region to a height of 2 m above the top of the vacuum vessel. This volume shall not include the SMS upper platform.

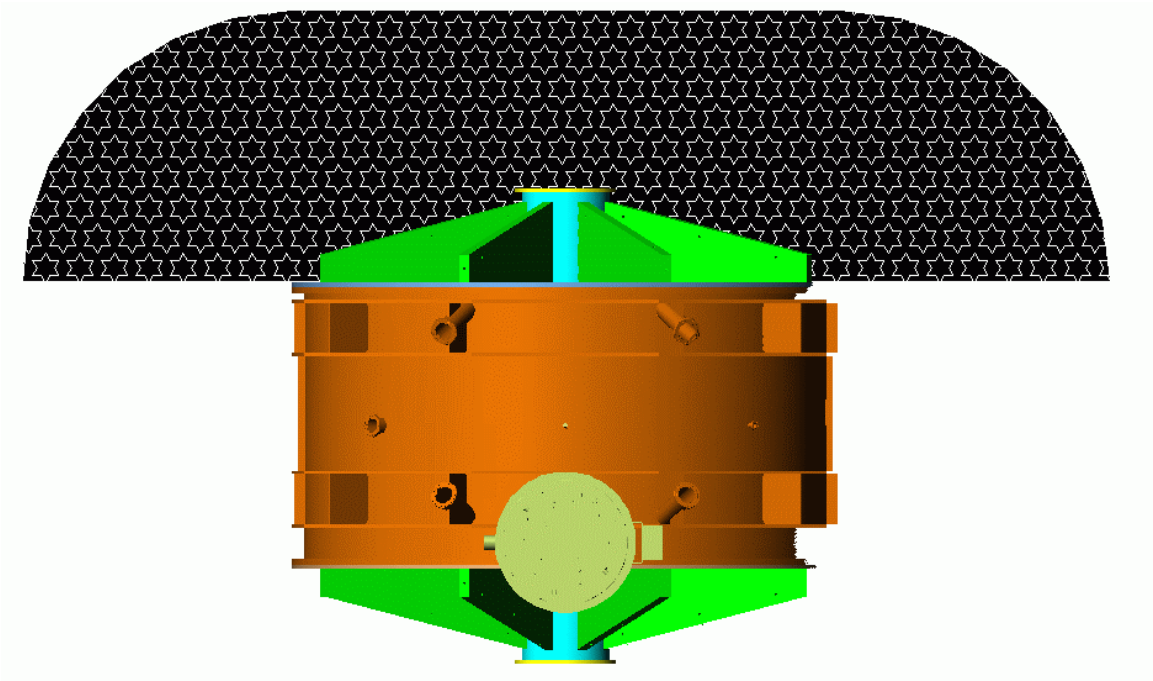

Figure 11. This plan view of the SMS shows the "vacuum keep-out zone" region (stars). The target service module, mounted on the upstream flange, and the magnet platform are not shown in this picture.

Although we believe that the hazard controls stated above are sufficient to reduce the risk to Risk Code 1, and the thickness of the titanium windows is large enough that they are to a large degree their own window protection, we will take the additional step of installing window covers. These will consist of 3/8" thick lexan sheets mounted to studs in the window frames in a manner similar to what is done for the standard pivot Hall C scattering chamber. These window covers will be put in place whenever the SMS and Ferris Wheel are separated by a distance greater than 0.25 m from the nominal running distance for a period greater than 10 minutes.

This control will reduce the risk to Risk Code 1 because the likelihood of a failure event is reduced:

- Large objects capable of causing catastrophic window failure will be unable to approach a window. The likelihood of a catastrophic failure is thus reduced to "Very unlikely to occur" (Likelihood Code A).
- The potential number of people who might perform work near the windows will be reduced to a small group who are aware of the hazard. With fewer people working near the window, the likelihood of a puncture failure drops from "Likely to happen given sufficient time" (Likelihood Code C) to "possible only over a long period of time" (Likelihood Code B).

4.1.2 Target Cell Implosion Hazard

The first step in operating the target is the removal of all air from the target, ballast tank and associated plumbing. To do this, the entire system is repeatedly evacuated and back-filled with

pure gas. The first back-fill of any part of the system is with helium to reduce the possibility of mixing air and hydrogen. Subsequent back-fills of the target loop or ballast tank use hydrogen. The full procedures for purging the ballast tank and target cell are described in the G0 Target User's Guide [Ca02]. It is imperative that the SMS and target service module be evacuated before pumping on the target loop. The target cell is very thin and will implode if the pressure outside it exceeds the pressure inside.

Without controls, the likelihood of this occurrence is estimated to be "likely to happen given sufficient time" (Likelihood Code C). While there is no danger of personnel injury (the target is completely enclosed by the SMS), the property loss, not to mention the labor required to replace the cell, would involve costs in the $500 to $10,000 range resulting in a Consequence Level of II. The Risk Code with no controls is then 2. In order to mitigate this risk, two controls are implemented: 1) The engineering control of interlocking target pneumatic valve PV21 with vacuum as indicated by the SMS vessel cold cathode gauge to prevent pumping on the target loop unless the vessel is evacuated. If the gauge is turned off, preventing a valid vacuum measurement, the interlock is opened and evacuation of the cell prevented. 2) As a further control, any venting of the G0 SMS vacuum vessel must be approved in writing (or by e-mail) by the target person on-call. With these controls in place, the likelihood of target cell implosion is greatly reduced. The Risk Code is mitigated to level 0.

4.2 Hazards Associated with the Cryogenic Cooling Circuits

In addition to the normal hazards inherent to cryogenic materials (e.g. the dangers of "burns" and oxygen concentration near cold surfaces) the following hazards associated with the cryogens in the magnet plumbing have been identified.

a. **Over-pressurization of cryogen plumbing.** The most likely cause of this event is a sudden loss of the insulating vacuum (LOV) with LHe in the magnet. This scenario was analyzed by the magnet vendor [Br99]. A reanalysis [Mu02a] performed prior to the G0 SMS Safety Review found and corrected an error in the vendor's sizing of the LHe rupture disk. These analyses were done without consideration of the mechanical relief valves or the normal exhaust lines and therefore represents a worst case. For the helium circuit, they conclude that the helium pressure would not exceed 5 atm (the rupture disk pressure) in the reservoir and would not exceed 6.4 atm in the helium coolant channels and piping. For the nitrogen system, the pressure will not exceed the rupture disk pressure in either the reservoir or the piping. The reservoirs and piping are quite capable of withstanding these pressures according to the design analysis performed by the magnet vendor [Br00]. A table of the specifications of all of the pressure vessels of the magnet and the associated relief systems is provided in Appendix C.

   While the calculations suggest that the system is theoretically safe, one can imagine conditions under which the assumptions of the analysis would be violated. For example, faulty pipe material or a poor weld might be weaker than the design strength; or the relief path might become blocked by foreign or frozen material. In such cases, the piping or joints might fail.

If the failure is **internal** to the cryostat, this could result in a large internal leak into the insulating vacuum, which might cause over-pressurization of the vacuum vessel. The likelihood of a rupture in the plumbing during normal operation is estimated in Table 2 [EHSb].

Equipment	Individual Failure Rate (/hr)	Number of Items	Total Failure Rate (/hr)
Pipes < 3”Pipes	1×10^{-9}	35	3.5×10^{-8}
Valves	1×10^{-8}	3	3.0×10^{-8}
Welds	3×10^{-9}	35	1.1×10^{-7}
Total			1.7×10^{-7}

Table 2. Failure Rate Estimate for Internal Plumbing

For the purposes of this estimate, the number of welds and pipes was augmented by 20% and values for vacuum valves were assumed for the cryogenic valves. The failure rate, driven by the possible failure of welds, implies one failure per 672 years, i.e. Likelihood Code A (very unlikely to occur) [EHSa]. The consequences and risks of this hazard will be discussed further in item b below. It is important to note that these estimates assume “normal operation”. Inadvertent sudden cooling of the magnet could produce thermal contraction and shock, which would increase the likelihood of failure. This possibility will be discussed in §4.5.2.

Another possibility is that faulty **external** plumbing might suddenly give way releasing cold cryogens and possibly ejecting plumbing fragments at high speed. The relief of a rupture disk entails similar consequences. Property loss would be minimal but personnel injury could be severe, though unlikely to be fatal. A Consequence Level of III is therefore assigned to this type of event. There are fewer pipes, valves and welds that are externally exposed, so external plumbing rupture can also be considered to be very unlikely to occur (Likelihood Code A). However, a rupture disk relief is expected to happen given sufficient time (Likelihood Code C). The greatest risk, a Risk code of 3, then comes from the possibility of injury due to rupture disk fragments.

The risk can be reduced through the following controls 1) Rupture disks must be located at a height and orientation such that all fragments are blown upward above anyone working in the vicinity. 2) Where it is impossible to relocate a rupture disk, a protective screen or tube must be installed. 3) Warning signs must be installed near the rupture disks. These should tell workers to avoid the immediate vicinity of the rupture disks exhaust. 4) Personnel working on the SMS platform, near the rupture disks and other external plumbing, must be limited during cooldown to those who are aware of the hazard, i.e. whose approved signatures appear in the list in Appendix A 5) Rupture disks must be inspected regularly to ensure that no external foreign material can block their operation. Assuming that these controls are followed, the risk of personal injury will be greatly reduced. This will result in a reduced Risk Code of 1.

b. **Over-pressurization of the vacuum vessel caused by leak in cryogen plumbing.** The likelihood of this event is estimated in Table 2 to be very unlikely to occur (i.e. Likelihood Code A). The consequences depend on whether gas leaking into the vacuum vessel can be

adequately relieved. The main vessel will withstand an internal pressure of 22 psia (0.5 atm pressure difference) according to analysis by the vendor [Br02]. The target service module was designed to withstand an internal pressure of 29.4 psia. [Gu01]. The vessel was successfully tested at UIUC, with all relief valves sealed, to a pressure of 2.21 psig (roughly 17 psia) as specified by the ASME code. A titanium exit window was individually tested to a pressure of 165 psig (roughly 180 psia) [Ba99b].

There are 4 parallel-plate relief ports on the vacuum volume located: on the target service module (3" diameter) [Gu01], on the cryobox (2" diameter), on the main cryostat volume at the 315° position (4" diameter), and on the main vessel pump-out port at the 180° position (8" diameter). The latter was added in response to concerns raised during the G0 SMS Safety review by G. Mulholland [Mu02b]. By itself, it could maintain the pressure in the vessel below 22 psia with more than 20 gallons/min of LN2 pouring into the interior of the vessel, evaporating, and exhausting at 0° F. The most serious consequence of this event is associated with the cost of repair of a major internal leak in the cryogenic system which is likely to be in the $10k to $100k range. A Consequence Level of III is therefore assigned, resulting in a Risk Code of 1.

4.3 Hazards Associated with the Electrical Circuit

The charging circuit for the SMS provides, at full power, 5000 A at about 13.5 V to the 0.53 H inductive load of the magnet and leads. At full power the SMS stores 6.6 MJ of energy. The voltage drop, due to resistive losses in the water-cooled leads implies a power dissipation of 67.5 kW. The hazards associated with the electrical circuit arise from this large stored energy and power dissipation.

4.3.1 Magnet Quench Hazard

If, for some reason such as local heating due to a heat leak or mechanical energy release, the superconductor in the SMS becomes locally normally conductive (a quench), resistive heating will cause the normal zone of the conductor to propagate through the superconductor at an estimated rate of 9.1 m/s [Lv00]. Without adequate detection and protection systems, the excess heat released in the normal conductor would destroy the coils in short order. The heat would result in immediate boil-off of the cryogens causing the LHe and LN2 circuits to be pressurized. Eventually the conductor would fail resulting in high voltages being induced, due to the stored magnetic energy, which would cause further damage to the magnet and possibly electrical shock and burn injuries to those standing nearby. A quench, in the absence of working quench detection and prevention systems, would cause major property damage (Consequence Level IV). Given the dependence on cryogen supplies to maintain the conductor in its superconducting state, a quench is expected to happen on the 10 day to 10 year time scale which qualifies this hazard for Likelihood Code C. A Risk Code of 4 must therefore be assigned.

The strategy for mitigating this quench hazard is to turn off the supply of current to the magnet and safely dump the stored energy before heating of the conductor has reached destructive levels. The estimated time available to react to a quench is on the order of seconds [Lv00]. We rely, therefore, on automatic systems for detection of the quench and fast shutdown of the magnet. As described in §2.3, the method for detecting a quench is to sense the relatively large resistive voltage drop which accompanies local heating of the conductor. This is accomplished by two

parallel and independent quench detection systems, also described in 2.3. The voltage threshold at which the quench is signaled is critical. Calculations [Lv00] indicate that if the stored energy can be dumped with a time constant of 10.6 s (i.e. the current dropped from 5000 A to 1 A in 90 s), then a quench detection threshold in the range 200 to 500 mV is reasonable. In that case, the maximum temperature of a hot spot in the coil is expected to reach only 70 K, and the maximum discharge voltage required to dump the magnet stored energy would be 250 V, one-tenth of the insulation test voltage. The dump resistor is sized to provide the 10.6 s fast time constant. Thresholds for digital and analog quench protection are set at 250 and 350 mV respectively.

The redundancy associated with two quench detection systems greatly reduces the likelihood of simultaneous failure. To further reduce the odds, both systems must be regularly checked by initiating a fast dump at low current. In the case of the digital system this can be accomplished by setting the threshold for detection artificially low. A ramp at relatively high rate to a few amperes will then cause enough inductive imbalance to simulate a quench. The analog quench protection system provides test contacts for simulating a quench. With the quench protection and detection system in place and regular checks of its operation, the likelihood of damage or – injury due to quench is greatly reduced (Likelihood Code A) resulting in a Risk Code of 1.

4.3.2 Hazards from Exposed High-current Contacts

If metal tools accidentally come into contact with exposed leads on the SMS or the power supply and short them out, the likely outcome will be vaporization of the metal tool and an arc flash which could cause severe burns. When a quench is possible, even when the quench detection system is operating correctly, terminal voltages can exceed 50 V and there is significant (>0.5 joules) stored energy, conditions which can result in electrocution [EHSc]. With no hazard controls, an event of this kind is likely to happen (Likelihood Code C). Because death could result, the Consequence Level is IV and therefore the Risk Code is 5

Three controls are used to reduce the likelihood and severity of this hazard. 1) The primary control employs Lexan (clear plastic) covers, which enclose all exposed high current leads on the power supply and the magnet. These covers reduce the possibility of accidental contact with a current source when the power supply is active. 2) The power supply is equipped with a ground-fault detector. Any current that leaves the power supply must return. A short from a lead to ground results in the ground fault interlock being opened and the power supply being shut down. 3) Illuminated “Magnet On” signs, discussed further in §4.3.3, are used to warn personnel in the hall that the magnet is powered. These controls reduce the Risk Code to 1 by making the probability of an electrical accident “very unlikely to occur” (Likelihood Code A).

4.3.3 Hazards of Static Magnetic field

Because G0 has a toroidal field configuration, magnetic fields external to the cryostat are not large. Contours of constant magnetic field for the G0 magnet, when powered at the full operating current of 5000 A, are displayed in Figure 12. Potentially fatal medical outcomes may result from exposure to magnetic fields in people who have ferromagnetic objects in their bodies. A magnetic flux density exceeding 5 Gauss across the torso region of the body may interfere with the operation of bioelectronic devices. At fields above 10 Gauss, magnetic storage media, credit cards and analog watches may be permanently damaged. Fields can also extend out a significant distance with sufficient strength to attract loose ferrous (magnetic) objects. Such common items

include but are not limited to iron/steel cuttings, bolts, screwdrivers, most tools, and some survey equipment. These items can "take flight" in unexpected and potentially dangerous directions. We assign a Consequence Level of III and a Likelihood Code of B to the static magnetic field hazard, which results in a Risk Code of 2 if no hazard controls are in place.

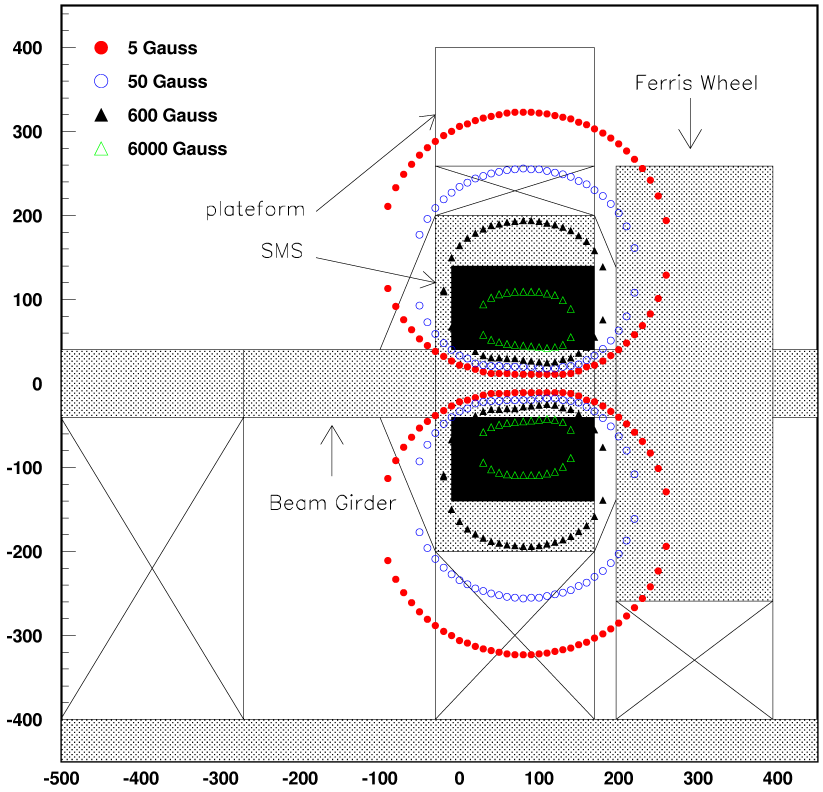

Figure 12. Representative contours of constant magnetic field for the G0 magnet when powered at the full operating current of 5000 A. Gray boxes represent regions where no personnel access is possible. The unit of length in the figure is centimeters.

During the operation of the G0 magnet, work areas in which the magnetic field exceeds 5 Gauss will be posted according to JLab requirements [EHSc]. A "Magnet On" sign (see Figure 13) will be placed on each of the four sides of the magnet. These signs display their messages illuminated by bright red LEDs when the field exceeds the safe limit according to built in sensors. These administrative controls are sufficient to drop the Likelihood Code of a static magnetic field incident to A (very unlikely). The Risk Code is correspondingly lowered to 0. We note that specific JLab rules apply to work areas in which the whole body magnetic field exceeds 600 Gauss. However, for the SMS, there is no accessible region for which the field is that high (see Figure 12).

Figure 13. Two of the four LED-illuminated "Magnet ON" signs that warn of potential risk due to static magnet field. The signs are shown in the un-illuminated (left) and illuminated (right) states.

4.3.4 VCL Loss of Coolant

Cold helium boil-off gas is used to cool the conductors, which interconnect the water-cooled warm buss to the superconducting buss. Under normal conditions, the flow of helium gas in these conductors, the vapor-cooled leads (VCLs), is set using a flow controller, which also provides a measure of the flow to the control system. The flow is adjusted automatically by the control system based on the magnet current according to:

$$Flow = 90 + 61 \times I/5000$$

where *Flow* is the gas flow in standard liters per minute and *I* is the current in Amperes. The constants in this formula can be adjusted from the "setpoints" page of the operator interface to the control system. The VCLs are designed [An99] according to §6.3.9 of the G0 SMS Technical Specification [Ba96] to survive a loss of lead flow for a period consistent with the 900 s slow dump duration. Failure to stop the current in time would result in costly damage to the leads (Consequence Level III). The VCL flow is driven by the differential pressure between the LHe reservoir and the warm helium return. The warm return pressure can change significantly and unexpectedly as the amount of warm helium returned to the end station refrigerator from other sources is altered. VCL flow interruptions are therefore likely to happen if given sufficient time (Likelihood Code C). The unmitigated Risk Code is then 3.

The control system performs two checks to sense an interruption of flow to the VCLs. First, if the flow measured by either controller drops below 80% of the setpoint, a slow dump is triggered. Second, if the voltage drop across the leads exceeds a threshold at about 80 mV, a slow dump is initiated. If a second, higher threshold around 200 mV is surpassed, the fast dump switch is opened. Additional administrative controls can improve the reliability of these checks. Each lead's flow is also measured by a simple, yet reliable, "bead" flow meter (made by Dwyer). At low current, the flow through this meter can be reduced using a valve built into the meter. The operation of the flow sensor and slow dump logic can be verified by periodically simulating an interruption in gas flow. As a second check, the lead flow, reservoir pressure, and warm return pressure should be checked and logged by hand once per shift when the power supply is in operation. These controls reduce the probability of damage to the VCLs due to loss of gas flow to an acceptable level (Likelihood Code A, Risk Code 1).

4.4 Hazards Associated with the LCW Circuit

4.4.1 Loss of LCW Flow With Power

The power dissipated in both leads of the water-cooled warm buss is about 67 kW at full power. If LCW flow were to stop, the temperature of the water would boil in about 2 minutes. Steam pressure could eventually rupture the cooling line. Alternately, steam pressure might blow the water out of the water-cooled conductor, which, lacking coolant, would then melt. Either scenario could result in the electrical circuit being abruptly broken and the 6.6 MJ of stored magnetic energy being dumped. Because the connection to the energy dump resistor might be broken, energy could be dumped through another path, possibly causing additional damage or even electrical shock. An interruption to the cooling of the power supply would also have serious consequences. The SCRs, diode, and transformers are all water-cooled. The manufacturer estimates that at full power (8000 A) the supply can only operate for 10 to 20 s if cooling is lost. The consequences of loss of LCW flow are severe (Consequence Level III). Water flow is dependent on many factors beyond the control of the experiment or even the Hall. An interruption of flow is therefore likely to happen on the 10-day to 10-year time scale (Likelihood Code C). The Risk Code without hazard controls is 3.

Return water flow is measured independently on the four parallel water flow circuits (see Figure 10). A drop in water flow in any of the circuits below a pre-set threshold causes the control system to open an interlock. The time available to deal with a water flow interruption is less than the slow-dump time of 900 s. Therefore, if the water flow interlock opens, a fast dump is initiated. Return water temperature in each of the parallel lines is also monitored. If a pre-set temperature threshold is reached, an alarm is signaled by the control system. Slow reductions in LCW flow can be monitored and acted upon by magnet on-call person before there are serious consequences. These controls eliminate the chance of significant damage or injury (Consequence Level I) due to an interruption in LCW flow, thus reducing the Risk Code to 1

4.4.2 Loss of LCW Flow Without Power

When the magnet is cold and there is no power being supplied to the magnet, the magnet-ends of the leads can become frosted. If, further, the LCW flow is interrupted, ice could form in the water-cooled cable. This could damage the cable or possibly block flow when the LCW is restored. The likelihood of this event is estimated to fall within the range of Likelihood Code C (likely to happen given sufficient time). The chief consequence would be loss of time and the cost of repair of the cable (Consequence Level II). To avoid this problem, the control system monitors water temperature, flow, magnet power level and cold gas flow in the VCLs. When conditions are ripe for ice formation, an alarm signals the magnet on-call person. Manually operated drain valves may then be employed to safely remove water form the leads. This control reduces the likelihood of damage to the leads to Likelihood Code B. The Risk Code is then calculated to be 1.

We note that originally, solenoid valves were installed and configured to drain when not energized based on the conditions for leads freezing as determined by the control system. This arrangement was deemed unsafe, because of the serious consequences of an accidental loss of power to the valves with the magnet energized. Reversing the sense of the solenoid valves would solve this problem (i.e. valves direct water to the leads when unenergized and only drain

when powered). However, in this mode, during a power failure event when it might be necessary to drain the leads, the solenoid valves would be inoperable. Lacking a consistent procedure for automatically operating solenoid drain valves, they were replaced with manual valves.

4.5 Hazards Associated with the Control System

The control system and its PLC platform perform many of the checks and controls that enable the G0 SMS to operate safely and reliably. However incorrect adjustment of the control system parameters, or improperly operating hardware can have just the opposite effect. Discussed below are the primary hazards and inherent risks associated with the operation of the control system.

4.5.1 Radiation Damage to the Control System

Nearly every computer and "complex" embedded controller installed in the high radiation environments at Jefferson Lab has experienced a radiation-induced failure (Likelihood Code C). Such failures typically involve the corruption of RAM though could in principle result in permanent hardware damage. An Allen-Bradley PLC built into a Dynapower power supply similar to the G0 power supply is one such example [An00]. The failure of electronics and, in particular the PLC of the control system, would disable many of the hazard controls discussed above. If such a failure goes unnoticed, the magnet is vulnerable to many serious (Consequence Level IV) failure scenarios.

The only programmable devices that have performed reliably are those containing very simple micro-controllers [An00]. Such devices are found in helium level meters, lead flow meters, and simple process controllers. The G0 PLC is a complex embedded controller containing an operating system and a large RAM, which may make the device unreliable in the Hall-C radiation environment.

Ideally, the PLC should be placed in a neutron/gamma radiation-free environment by removing it entirely from Hall-C. The cost, in time and money, to implement this solution makes it impractical. Signal degradation over the necessarily longer cable runs might even introduce additional reliability problems. In order to reduce the risk of radiation damage, the PLC and other control electronics (including the power supply) are located upstream of the G0 target and are shielded from line-of-sight radiation emanating from either the G0 or the Möller target by approximately a meter of steel. As a check on the continued operation of the PLC, the ladder logic is required to reset a hardware timer relay once per program cycle (every 23 ms). If the timer is not reset within 1 s, a "heart-beat" interlock is opened which initiates a fast dump. The random nature of radiation damage implies that it is possible for only a few bits of data to be altered while the PLC program continues to run. Therefore, during normal operation of the experiment, the PLC program will be manually reloaded on a regular basis, whether or not there are any indications of radiation damage. These controls should minimize the likelihood of a hazard associated with radiation damage to the PLC (Likelihood Code B). To reduce the consequences of the most costly failure mode: an undetected and unprotected magnet quench, the independent analog quench protection system is run in parallel with the PLC-based digital system. This reduces the Consequence Level to II. With hazard controls the Risk Code becomes 1.

4.5.2 Error in Control System Operation During Cooldown

As it relates to the cryogen circuit, the control system functions mainly as a monitor of temperature and vacuum. However, because the slow reduction of inlet gas temperature during the Cooldown I phase is managed by a control system PID loop, it is possible that failure of temperature sensors or the "mixing valve" actuator control, or inappropriate adjustment of the PID loop parameters could result in 80 K helium being supplied in large quantities to the G0 magnet when it is still near 300 K. If this continues for a long enough period (greater than 2 hours), the temperature of parts of the magnet could change rapidly enough to cause damage through differential thermal contraction and thermal shock. This could result in leaks in the cryogen plumbing or faults in the coil internal and external electrical connections.

The consequences of an internal cryogen leak have already been discussed in §4.2. Similarly, damage to the power buss, while not dangerous in itself during the cooldown (no power would be supplied to the magnet), would be expensive and time consuming to repair. Thus the consequence of such an event is chiefly property damage, probably in the range of $10k to $100k (Consequence Level III)

Experience gained at UIUC suggests that the likelihood of a temperature sensor or valve actuator failure once the valve has been calibrated, is low, but possible on the 10 day to 10-year time scale (Likelihood code C). It is more difficult to estimate the likelihood of incorrect adjustment of the CDHXR PID loop. This control loop has already been used so the basic operation of the system and nominal values of the parameters have been checked. Trained operators who are aware of the hazards will staff the cooldown period. The cooldown will normally be started with conservative settings for the PID loop. For these reasons, the 10-day to 10-year time scale for an accident seems appropriate.

Coupling Likelihood code C with Consequence Level III yields a Risk Code of 3 if no hazard controls are implemented. The most straightforward way to reduce the risk is to ensure that an operator is present during critical phases of the cooldown. This permits manual intervention in case of a hardware fault and quicker correction in case of misadjustment of the PID loop. The greatest possibility of thermal shock is during the Cooldown I phase over which the magnet is brought from 300 K to 100 K. Two modes of running will be implemented during this cooldown phase:

a. Between the hours of 8:00 AM and 5:00 PM, Monday through Friday, an operator will be on hand in Hall C or a JLab office. The status of the cooldown will be checked and logged by the operator at least once per 30 min. The cooldown will be operated in "automatic" mode with the CDHXR mixing valve under the control of the PID loop. Cooldown will typically proceed at a rate of 1 K/hr.
b. Between the hours of 5:00 PM and 8:00 AM on Monday through Friday and all day on Saturday and Sunday, the magnet will be operated in "manual" mode. The PID control of the CDHXR mixing valve will be discontinued. The valve will be set manually at a fixed setting corresponding to from 0.5 to 0.8 K/hr cooldown rate. During this period a designated operator will be required to carry a pager and be "on call". The control system will be set to generate pager calls based on any alarm condition.

In order to prevent rapid warm-up of the magnet in the event of loss of LN2 supply to the CDHXR, the cooldown gas inlet cryogenic valve (JT2) will be closed automatically if the supply gas temperature exceeds a threshold around 300 K. To ensure that operators have the proper level of experience and understanding of the hazards involved in the cooldown, only personnel whose names appear in Appendix A will be allowed to serve as operators or to interact with the control system. Following these procedures, the likelihood of a control system problem is reduced to Likelihood Code A with a corresponding Risk Code reduction to 1.

5. Hazard controls

Table 3 below summarizes the likelihood, consequences, risk, and controls of the hazards discussed in §4. Codes in parenthesis are without controls.

Hazard	Controls	Likelihood	Consequence	Risk
Catastrophic failure of exit window	Vacuum keep-out zone, window covers when detector pulled away	A (B)	IV	1 (3)
Puncture of window by sharp object	Vacuum keep-out zone, window covers when detector pulled away	A (C)	II	0 (2)
Target cell implosion by venting SMS when target is evacuated	Valve to cell vacuum pump interlocked to SMS vessel pressure. Approval from Target group to vent.	A (C)	II	0 (2)
Over-pressurize of cryogen plumbing. External plumbing, rupture disk relief	Physical barriers, warnings, approved personnel on platform, inspect rupture disks.	C	I (III)	1 (3)
Over-pressurize vacuum vessel.		A	III	1
Damage to magnet due to quench	Quench detection and protection system, regular tests.	A (C)	IV	1 (4)
Burn or electrocution caused by touching an exposed high-current lead	Power supply (PS) ground fault interlock. Barriers around PS exposed leads. Lockout of PS when magnet platform being accessed. Magnet platform off limits when PS in operation.	A (C)	IV	1 (4)
Injury or damage due to static magnetic field	5 Gauss area posted, red beacon when magnet is powered.	A (B)	III	1 (2)
Interruption of gas flow to VCL when magnet is powered	Slow dump if flow interrupted or transition lead voltage exceeds 130 mV. Fast dump if voltage exceeds 200 mV. Check with bead flow meters. Test system periodically.	A (C)	III	1 (3)

Interruption of LCW flow when magnet is powered	Flow and temperature measurement on returns. Fast dump if Flow is below a preset threshold.	C	I (III)	1 (3)
Freezing of LCW in magnet-end of leads	Alarm signaled by control system. Manual drain valves.	B (C)	II	1 (2)
Unnoticed radiation damage to PLC or control hardware	Shielding and control system placement in the hall, heart-beat interlock, regular PLC program reloads	B (C)	II (IV)	1 (3)
Control system fault during Cooldown I phase.	Approved operator during Cooldown I phase when control system runs cooldown. Automatic closure of JT2 if gas temperature exceeds threshold.	A (C)	III	1 (3)

Table 3. Summary of hazards and risks. Codes in parenthesis are without controls.

5.1 Safety systems

5.1.1 Interlocks

The control system maintains a number of interlock chains. Each chain controls a particular function of the control system. An interlock chain consists of a series of conditions. When all conditions are satisfied the operation of the magnet may proceed. If any condition is not satisfied, the interlock chain is "broken", and the control system must perform whatever steps are necessary to bring the magnet to a safe state. The required conditions and their current status for each interlock chain are summarized on the "Interlocks" page of the control system operator interface. A typical display is shown in Figure 14.

A column of indicators on a sub-panel of the display represents each interlock chain. A red indicator implies a fault condition; green implies no fault. The status of the chain and the action performed when the chain is either broken or whole is defined at the bottom of the sub-panel.

Thresholds for the some of the conditions of the interlocks are set from the "Setpoints" page, which requires the Magnet Expert password. All conditions are latched by the PLC. Therefore, once a condition has faulted, the associated interlock will remain open, even if the condition is no longer in the fault state, until the reset button is pressed. Each interlock chains is discussed in greater detail below.

5.1.1.1 The Power Supply Interlock Chain.

Conditions in this chain map directly to conditions maintained by the power-supply itself. The indicators duplicate lights on the front panel of the power supply, which can not be viewed when the hall is closed. The power supply is hardware interlocked by the conditions of this chain. It will not go to the ON state unless all are met.

Figure 14. A typical display of the interlock chains. Each sub-panel represents a separate chain.

5.1.1.2 The Turn-On Interlock Chain

In addition to the hardware power supply interlocks, additional conditions must be met before the PLC permits the supply to be activated. It is important to note that once the supply is activated, a fault on the turn-on interlock chain does not necessarily cause the supply to turn off. However, most of the turn-on interlock chain conditions also appear in one form or another on the slow or fast dump chains.

5.1.1.3 The Current Ramp-up Paused Interlock Chain

Once the power supply has been enabled and current ramping has been initiated, there are a few conditions that causing ramping to be "paused". These are conditions, which are deemed to be precursors to a possible slow or fast dump if ramping is continued. Once the condition is cleared and the associated latched alarm is reset, ramping will continue. Be aware that the ramp logic does not wait for a specific command to continue ramping – as soon as a latched alarm causing a pause is reset, ramping will proceed.

5.1.1.1 The Slow Dump Interlock Chain.

When the slow dump interlock chain is broken; the power supply is ramped down to zero current at a rate of 5.55 A/s. For full current, this takes 900 s (15 min). Generally, slow dump conditions are those, which if left unattended, would eventually cause a fast dump or damage to the magnet. It is possible for the operator to initiate a slow dump by pressing the slow dump button on the "Power Supply" page.

5.1.1.5 The Fast Dump Interlock Chain

Breaking the fast dump interlock causes dump switch to be opened. The result is that the energy of the magnet is dissipated in the dump resistor in about 90 s. A fast dump is not something to be taken lightly. Typically, it will be accompanied by some boil-off LHe and an associated pressure rise in the helium reservoir. This might cause the relief system to release helium into the hall. Induced voltages, eddy currents, and mechanical strain are not negligible during a fast dump. The reasons for any fast dump must be thoroughly studied and understood before magnet operation is recommenced. In an emergency, it is possible for the operator to initiate a fast dump by pushing the dump-switch-open button on the "Power Supply" page.

5.1.2 Monitoring systems

The monitoring of the G0 SMS is carried out by the operator interface program running on the console PC. This program, written using the LookoutDirect Human-Machine Interface (HMI) system, provides numeric and graphical information about all subsystems of the G0 SMS. A historical data base is maintained in compressed form on the local disk. All parameters provided by the PLC are recorded in the data base. The Lookout program also maintains an event log which includes information about "button presses" and parameter adjustments made at the console.

An important function of the Lookout program is the management of alarms, defined as events which require attention of the experiment shift staff or Magnet Expert. Each alarm condition is identified by a number and all appear on the alarms control page or its pop-up sub-pages (see Figure 15). Some alarms map directly into conditions incorporated in the interlock chains and so may cause the PLC to take some action, such as initiating a fast dump (see Figure 14). Alarm and interlock setpoints adjusted using the "Setpoints" page of the operator interface page (see Figure 16, which contains typical values). Alarming may be disabled for any of the alarm

conditions by a magnet expert (the operator interface must be logged in to the expert account). Disabling an alarm does not prevent the PLC from taking action, it just prevents the operator from being notified.

If enabled to do so, the control system will phone a digital pager carried by the magnet on-call person and transmit an associated four-digit alarm number when an alarm occurs and is enabled. The alarm number is preceded by the "pager check message" (defined in the lower left sub-panel of the alarm control page in Figure 15) to avoid confusion with JLab phone extensions. Alarm numbers are listed on the alarm control page next to each alarm. More details of the hierarchical alarm numbering scheme are provided in Appendix B. In order to test the paging system, a special "just checking in" alarm can be programmed to call the magnet on-call person at a particular time each day. For that alarm, only the "pager check message" is sent.

5.2 Safety equipment

We list here some of the safety equipment, which might be required on short notice for emergency work on the G0 SMS. Magnet operators should be aware of the location and operation of this equipment. Figure 17 shows the equipment as an aid to identifying its location.

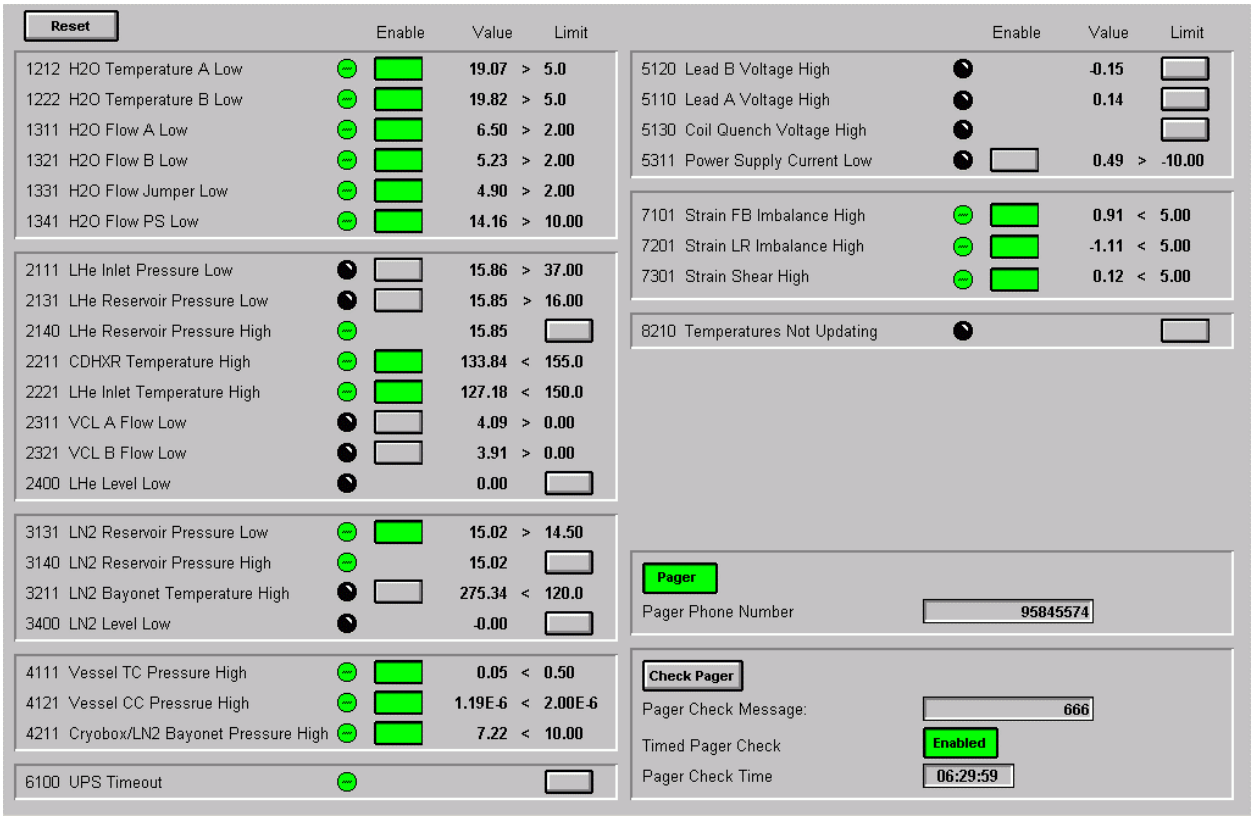

Figure 15. The alarms control page for the G0 SMS control system. In some cases (e.g. LN2Level Low), only a "summary" indicator is provided. Details may then be obtained by "popping up" a sub-page using the button at the right of the sub-panel.

5.2.1 Flashlight

A flashlight is attached magnetically to the console side of the G0 power supply. In case of a power failure, especially after a long power outage, a flashlight is essential when working behind the green shield wall. This flashlight is for emergency use only. It should not be borrowed for other purposes.

5.2.2 Fire extinguisher

The nearest fire extinguisher nearest the power supply and control racks is located behind the G0 control racks on the perimeter wall. It is JLab policy [EHSd] that unless you have received Jefferson Lab Fire Safety Training you should not attempt to fight the fire yourself. Instead, follow these steps:

1. When you see a fire or unexplained smoke, pull the nearest fire-alarm box or ensure someone else does.
2. Call or have someone else call 911.
3. Exit the building.
4. Do not fight the fire

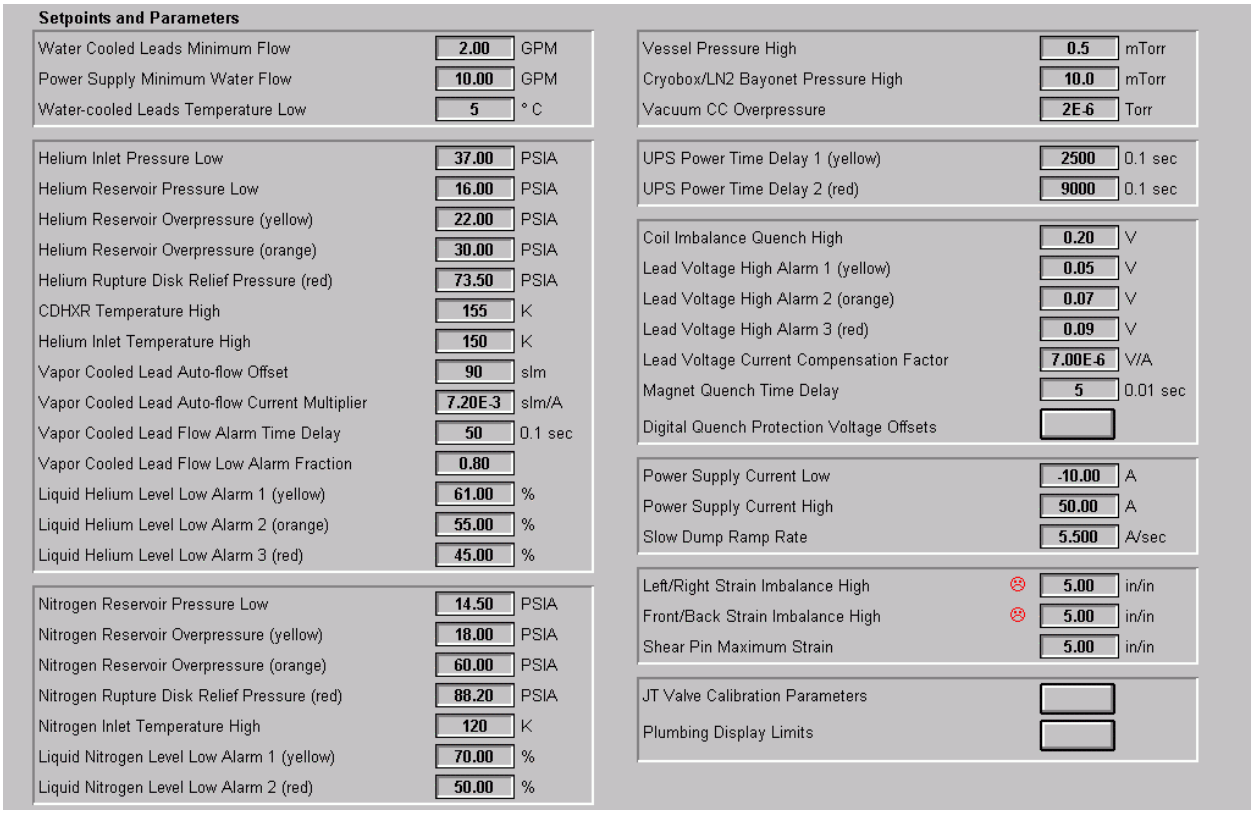

Setpoints and Parameters

Water Cooled Leads Minimum Flow	2.00	GPM
Power Supply Minimum Water Flow	10.00	GPM
Water-cooled Leads Temperature Low	5	° C
Helium Inlet Pressure Low	37.00	PSIA
Helium Reservoir Pressure Low	16.00	PSIA
Helium Reservoir Overpressure (yellow)	22.00	PSIA
Helium Reservoir Overpressure (orange)	30.00	PSIA
Helium Rupture Disk Relief Pressure (red)	73.50	PSIA
CDHXR Temperature High	155	K
Helium Inlet Temperature High	150	K
Vapor Cooled Lead Auto-flow Offset	90	slm
Vapor Cooled Lead Auto-flow Current Multiplier	7.20E-3	slm/A
Vapor Cooled Lead Flow Alarm Time Delay	50	0.1 sec
Vapor Cooled Lead Flow Low Alarm Fraction	0.80	
Liquid Helium Level Low Alarm 1 (yellow)	61.00	%
Liquid Helium Level Low Alarm 2 (orange)	55.00	%
Liquid Helium Level Low Alarm 3 (red)	45.00	%
Nitrogen Reservoir Pressure Low	14.50	PSIA
Nitrogen Reservoir Overpressure (yellow)	18.00	PSIA
Nitrogen Reservoir Overpressure (orange)	60.00	PSIA
Nitrogen Rupture Disk Relief Pressure (red)	88.20	PSIA
Nitrogen Inlet Temperature High	120	K
Liquid Nitrogen Level Low Alarm 1 (yellow)	70.00	%
Liquid Nitrogen Level Low Alarm 2 (red)	50.00	%
Vessel Pressure High	0.5	mTorr
Cryobox/LN2 Bayonet Pressure High	10.0	mTorr
Vacuum CC Overpressure	2E-6	Torr
UPS Power Time Delay 1 (yellow)	2500	0.1 sec
UPS Power Time Delay 2 (red)	9000	0.1 sec
Coil Imbalance Quench High	0.20	V
Lead Voltage High Alarm 1 (yellow)	0.05	V
Lead Voltage High Alarm 2 (orange)	0.07	V
Lead Voltage High Alarm 3 (red)	0.09	V
Lead Voltage Current Compensation Factor	7.00E-6	V/A
Magnet Quench Time Delay	5	0.01 sec
Digital Quench Protection Voltage Offsets		
Power Supply Current Low	-10.00	A
Power Supply Current High	50.00	A
Slow Dump Ramp Rate	5.500	A/sec
Left/Right Strain Imbalance High	5.00	in/in
Front/Back Strain Imbalance High	5.00	in/in
Shear Pin Maximum Strain	5.00	in/in
JT Valve Calibration Parameters		
Plumbing Display Limits		

Figure 16. The Setpoints page for the G0 SMS control system. This page may only be altered by a magnet expert (the expert password is required). Some parameters (e.g. digital quench protection offsets) are accessed by "popping up" sub-pages using the button at the right of the sub-panel. "VCL flow low alarm fraction" is the fraction of the setpoint flow that the readback value must meet. The interlock chains for the fast dump and slow dump are shown in 14.

5.2.3 Non-magnetic tools

It is extremely unlikely that any work will ever be carried out on the magnet while it is powered. However, just in case, a set of non-magnetic tools is kept in a shiny aluminum toolbox on the top platform of the magnet. Those tools are for emergency purposes only and should not be borrowed for other uses.

5.2.4 Cryogloves

During some operations on the SMS cryogen system, such as the replacement of a rupture disk or the removal of a bayonet, it is possible for surfaces to become uncomfortably (even dangerously) cold. Those operations should be carefully planed, and all required protective clothing should be on hand before the operation starts. It is conceivable that during a cryogen system emergency, there may be an unplanned need for protective clothing. A pair of protective gloves is kept in the shiny aluminum toolbox on the top magnet platform for that eventuality.

5.2.5 Ear and Eye protection

Under normal operation there is no requirement that eye or ear protection be worn near the G0 SMS. For some maintenance operations (soldering for example), eye protection is required. Ear

protection may be desired to suppress the sometimes-annoying sound of escaping gas or oscillating pipes. Both eye and ear protection is readily available from the Hall C work coordinator. A supply is also normally kept in the top section of the large G0 toolbox.

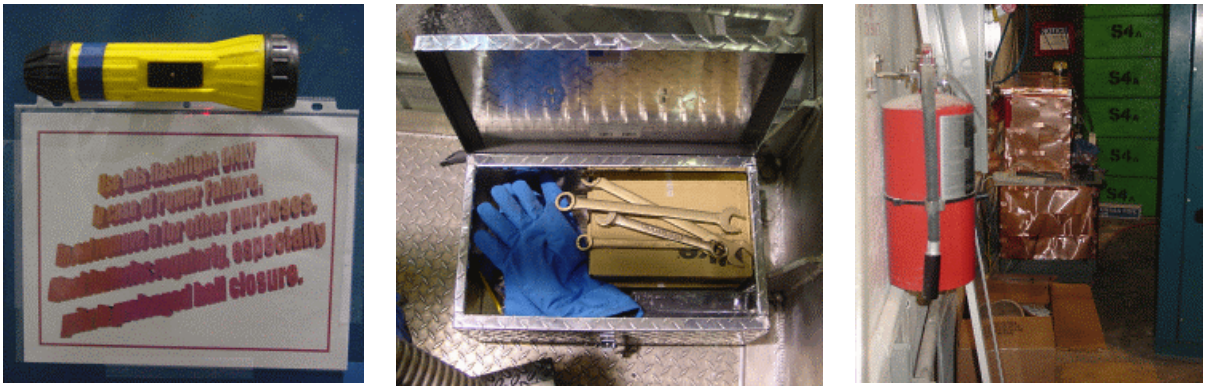

Figure 17. Some of the G0 safety equipment: the emergency flashlight, cryo gloves and non-magnetic tools in the shiny aluminum toolbox on the magnet top platform, and the fire extinguisher behind the G0 racks.

5.3 Administrative procedures

In this section, checklists are provided for common procedures related to the operation of the G0 SMS. As an additional hazard control, these checklists should be used to verify that all steps in a procedure have been followed (and none forgotten) and to document that the standard procedure was used should problems arise.

5.3.1 Venting the Vessel Volume

1. Preparing to Vent
   A. Magnet internals and the target have been warmed up to at least ambient temperature.
   B. Inform target personnel that the vessel shall be vented. The target should be at least ambient temperature and should have a minimum pressure of 1 ATM.
   C. Magnet is isolated from the upstream beam line and open to the down stream beam line.

2. Venting
   A. Connect 1/4 Tygon tube to a nitrogen spigot (located on the magnet platform) to the open port on the 13-1/4 CFF shear pin flange that has the analog 0-760 Torr gauge on it.
   B. Turn off all HV/UHV gauges.
   C. Stop the vessel turbo pump and its fore pump. Stop the beam line turbo pump and its fore pump. Stop the LN2 bayonet pump.
   D. Slowly open the valve supplying N2 to the vessel.
   E. Venting shall take over two hours and is complete when the 8” parallel plate relief plate drops.

5.3.2 Evacuating the Vessel Volume

1. Preparing to Evacuate

A. Connect Hall C's roots pumping system to the 3” ASA roughing port on the magnet.
B. Beam line valves should be in the state given at 5.3.1 step 1.C.
C. N2 fill/purge is disconnected and all access ports are closed.
D. Ensure that both turbo gate valves are open and open the 6” CFF gate valve on the roughing line.
E. Ensure that the analog vacuum gauge is open to the vessel.
F. Clean the 8” Parallel relief plate's o-ring and be sure that the plate is clean and free of debris.

2. Evacuating
   A. Install two clamps to hold the 8” parallel plate relief in place.
   B. Start the roots pumping station.
   C. When the vacuum reaches 600 Torr {maybe lower} start both of the turbo fore pumps.
   D. When the vacuum reaches 500 mTorr as measured at the vessel TC gauge start both the turbo pumps.
   E. Start the LN2 bayonet pump.
   F. Start the vessel CC gauge when the vessel TC gauge reads 2 mTorr.
   G. Stop the gauge if the pressure is above 5×10^{-4} Torr. Wait 1/2 hour and try to start the gauge again.
   H. When the vacuum reaches 1×10^{-4} Torr, close the 6” CFF gate valve on the roughing line.
   I. If the vacuum rises above 5×10^{-4} Torr within 10 minutes open the 6” CFF gate valve and continue to pump with the roots station for another 1/2 hour.
   J. When it is clear that the turbo pumps are able to maintain a vacuum better than $5x10^{-4}$ stop the roots.
   K. Remove the clamps from the 8” PPR.

3. Leak Checking
   A. Connect a leak checker to an open port on the shear pin flange.
   B. Close the beam line turbo pump gate valve.
   C. Throttle the vessel turbo pump gate valve to maximize the signal to the leak checker.
   D. Working from the top down, leak check all new plumbing.
   E. Leak check around the transition box.
   F. Leak check the bottom of Envy's exit window (6 o'clock).
   G. Leak check around the 8” parallel plate relief valve.
   H. When leak checking is complete, open the turbo pump gate valves and disconnect the leak checker.

5.3.3 Cooldown from 300 K to 80 K

The cooldown of the helium circuit from 300 K to 80 K is performed through the use of a liquid nitrogen heat exchanger (CDHXR). Gaseous helium of variable temperature is produced by mixing cold (80 K) helium from the heat exchanger with an adjustable amount of warm (300 K). The mixing valve (JT8) can be controlled by the PLC using a PID loop which seeks to maintain a constant temperature differential between the inlet and the average coil temperature. This insures that the temperature of the coils can not drop too quickly, which might cause damage to the

hardware due to thermal shock. A sketch of the configuration of the helium circuit is shown in Figure 18a.

1. Preparing for cooldown
   A. Cool down may commence once the vessel vacuum is at or near 1×10^{-5} Torr
   B. If parts of the plumbing have been opened to the atmosphere for maintenance, the exposed plumbing segments must be repeatedly evacuated and purged to remove impurities as measured by the Cryo group.
   C. Contact CHL and inform them that G0 may take as much as 10g/s 4 ATM house helium, returning it through the warm return line.
   D. Open valve JT9/MV60 to 100%.
   E. Turn on LN2 level control for cooldown heat exchanger (CDHXR).
   F. Verify that MV62 is open.
   G. Verify that valve 922 (the black handle manual valve on the CDHXR cold supply) is closed.
   H. Verify that JT1, JT2, JT3, JT4, JT5, JT6, and the plug valve are closed.
   I. Open JT8 (the CDHXR mixing valve) to 100%.
   J. Verify that the CDHXR is filling with LN2 and that the outlet temp is set for -32 to -50 C.
   K. Set lead flows to 0 current setting (90 SLPM).

2. LN2 Shield Cooldown (Note: this step may be done in parallel with step 3 below.)
   A. Open JT3 and JT5 100%.
   B. When the N2 inlet temp drops to 80-90 K close JT5.
   C. When average outer shield temp approaches 100 K turn on LN2 level meter.
   D. When the LN2 reservoir is 50% full open JT3 100% and close JT5.
   E. Turn on LN2 PID loop when the level reaches the PID setpoint.
   F. LN2 usage will be high until the perimeter lines and the magnet have completely cooled down.
   G. If LN2 level cannot be maintained or shield temperatures do not drop, then go back to forced flow. Attempt to switch to thermo-siphon mode in two hours.

3. Cold Mass Cooldown to 80 K (Note: this step may proceed in parallel with step 2 above.)
   A. Slowly open JT2 to 100%.
   B. Maintain 75 K difference between the helium inlet temperature and the mean coil temperature.
   C. Slowly open the manual valve on the CDHXR to 4 turns open.
   D. Turn on cool down PID and enable JT2 auto close and CDHXR temp alarm.
   E. When JT8 has closed to 75% open the manual valve on the CDHXR 1 turn. The CDHXR manual valve can be opened a total of 8 turns.
   F. Liquid helium cooling may start when the mean coil temperature reaches 100 K (colder is better).

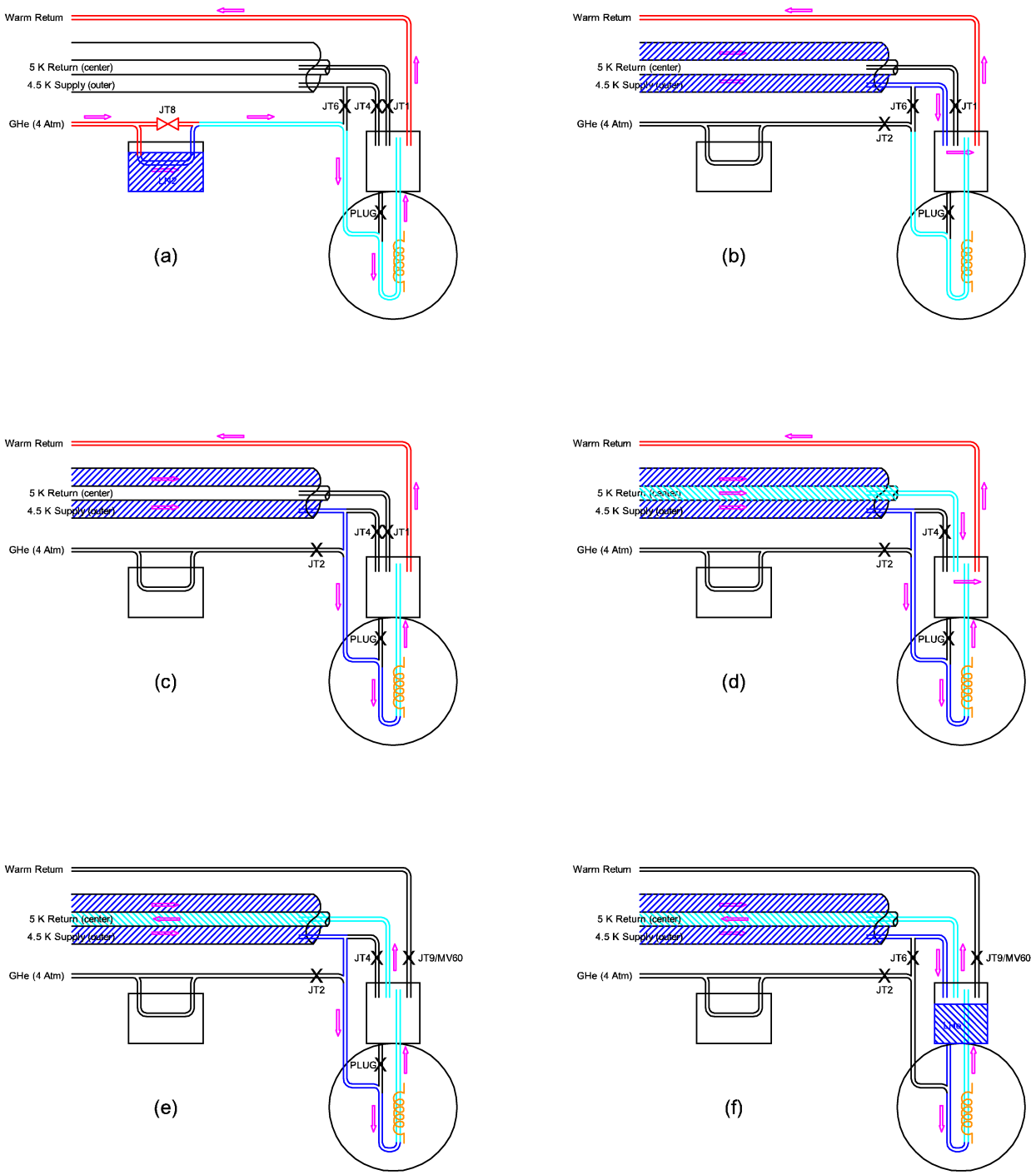

Figure 18. These sketches show illustrate the configuration of the helium cooling circuit during various stages of the cooldown. Only those valves that are closed are indicated. The stages are (a) Cooldown I: forced-flow cooling using gas provided by the CDHXR; (b) Cooldown II: cooldown of the cold supply line with magnet bypassed; (c) Cooldown III: forced-flow cooling with gas from the supply, warm gas exhausted via warm return; (d) Cooldown IV: reverse flow cooldown of cold return components (bayonets and U-tubes), (e) Forced-flow cold return mode , and (f) Thermo-siphon cold return mode, the normal running mode.

5.3.4 Cooldown from 80 K (so-called standby) to 4 K

The steps involved in reducing the temperature of the cold mass from 80 K to 4 K are illustrated in Figure 18b through 18f.

1. Changeover
   A. Inform CHL that 4K cooling shall begin.
   B. Slowly close JT2. With that valve closed, the cold mass is isolated from the cooling lines.
   C. Monitor Hall C's 4K supply flow, do not exceed limit imposed by the CHL.
   D. Slowly open JT4 to 100% or to the maximum position for which the flow limit is not exceeded. The goal is to provide sufficient flow through the, initially warm supply line to cool it, without significantly heating up the cold mass. The co-axial sections of the transfer line should be at about 80 K, but interconnections may be near room temperature. Figure 18b shows a sketch of the system at this stage known as Cooldown II.
   E. Note that helium inlet pressure has dropped.
   F. When the warm helium return reaches 150 K slowly open JT6 15%.
   G. When the warm helium return is at or near the mean coil temperature slowly transfer flow from JT4 to JT6. At the end of this transfer the system will be in Cooldown III mode. The cold mass is being force-flow cooled as shown in Figure 18c.
   H. Because the warm return is maintained at a slightly lower pressure than the cold return, it is possible to “reverse flow” helium that has been cooled by heat-exchange in the coaxial sections of the transfer line in order to cool the warm components of the return line (bayonets, U-tubes, interconnections on the peripheral transfer line). This mode, Cooldown IV is illustrated in Figure 18d. To proceed with this mode, wait until the mean coil temperature reaches 10K. Verify that the cold return pressure is greater than the warm return pressure. If so, slowly open JT1 100% to “reverse flow” the transfer lines on the cold return circuit. Monitor Hall C's supply and return temperatures.
   I. If return temperature rises significantly close JT1 and wait 1 hour.
   J. At this stage, for more efficient refrigeration, we must to begin to return gas to ESR on the cold return. If the return temperature is okay, slowly close JT9/MV60 to 84% open. Hold for 30 minutes. Monitor supply and return temperatures. If helium inlet temperatures rises re-open JT9/MV60 and wait 30 minutes.
   K. If return temperature is okay, slowly close JT9/MV60 to 68% open. Hold for 30 minutes. Monitor supply and return temperatures. If helium inlet temperatures rises re-open JT9/MV60 and wait 30 minutes.
   L. If return temperature is okay, slowly close JT9/MV60 to 52% open. Hold for 30 minutes. Monitor supply and return temperatures. If helium inlet temperatures rises re-open JT9/MV60 and wait 30 minutes.
   M. If return temperature is okay, slowly close JT9/MV60 to 36% open. Hold for 30 minutes. Monitor supply and return temperatures. If helium inlet temperatures rises re-open JT9/MV60 and wait 30 minutes.
   N. Open JT4 to 15%. Close JT6 as needed to maintain total hall cryogen flow at less than the limit.
   O. If return temperature is okay, slowly close JT9/MV60 to 20% open. Hold for 30 minutes. Monitor supply and return temperatures. If helium inlet temperatures rises re-

open JT9/MV60 and wait 30 minutes. The cold mass is now being cooled by forced flow with cold return. In this mode, shown in Figure 18e, LHe will begin to accumulate in the lower coils of the magnet. It is normal to observe rises of a few K in the temperatures of the upper coils as gas flow is restricted by the liquid build-up.

P. When mean coil temperature reaches 6 K turn on LHe level monitor.
Q. When liquid helium level reaches 70%, slowly open plug valve.
R. Gradually transfer flow from JT6 to JT4. The system is now operating in thermo-siphon mode (see figure Figure 18f).
S. When the liquid helium reaches 50% slowly close JT9/MV60 0%.
T. Slowly close JT4 to ~37%, when the helium level enters the PID deadband turn on PID control.
U. Confirm that all alarms are activated and that their setpoints are correct.

5.3.5 Warm up from 4 K to 80 K

1. Preparing to warm up
   A. Inform CHL that 4K cooling shall stop, gas shall be returned through the warm return, and that as much as 10 g/s 4 ATM house helium may be used to warm magnet.
   B. Confirm that JT2, JT6, and JT8 are closed.
   C. Turn on LN2 level control for cooldown heat exchanger (CDHXR).
   D. Verify that MV62 is open.
   E. Verify that valve 922 (the black handle manual valve on the CDHXR cold supply) is open.
   F. Verify that lead flow is at zero current setting.
   G. When the CDHXR N2 vent is between -32 to -50 C warm up may commence.
   H. Inform target personnel that magnet shall be warmed up and target cooling should stop.

2. Stop Cooling
   A. Slowly close JT4.
   B. Slowly open JT9/MV60 100%.
   C. Slowly close JT1.

3. Warm up For Standby mode
   A. Allow coils to warm up gradually.
   B. When the mean coil temperature approaches 65 K slowly open JT2 50%.
   C. When the warm helium return reaches 90 K close the plug valve.
   D. Set JT2 to maintain a mean coil temperature between 80-100K.
   E. Turn on PID control for JT2.

4. Warm up for venting/maintenance
   A. Allow coils to gradually warm to 20 K.
   B. Slowly open JT2 50%.
   C. When the warm helium return reaches 100 K close the plug valve.
   D. Slowly open JT2 100%.
   E. Turn on PID control for JT8.

5.3.6 Warm-up from 80 K to 300 K

1. Slow Warm-up
   A. Turn off LN2 PID and close JT5.
   B. When JT8 has been opened to 100% by PID, close manual valve on CDHXR 2 turns.
   C. Repeat step 2 until manual valve is fully closed.
   D. Turn off CDHXR LN2 level control.
   E. When the average coil temperature is greater than 225 K then the procedure 5.3.6 step 2 below can be used speed the warm up if so desired. Otherwise when internal temperatures are at or near 280 K proceed with venting the vessel (5.3.1).

2. Partial Vessel Venting for Rapid Completion (Note: Wait until the average coil temperature is greater than 225 K to begin this procedure.)
   A. Connect roots pumping station to magnet.
   B. Stop both vessel turbo pumps and their fore pumps.
   C. Connect a N2 line to the vessel.
   D. 4. Introduce nitrogen until the vessel pressure reaches 400 Torr.
   E. Pay close attention to vessel pressure and cold mass temperatures.
   F. Do not allow vessel pressure to rise above 680 Torr if there are temperatures in the magnet less than 280 K.
   G. When internal temperatures are at or near 280 K proceed with venting the vessel (5.3.1).

5.3.7 Turning on the Power Supply and Powering the Magnet

1. Verify that spare rupture disks and non-magnetic tools are in place on the magnet platform.
2. Sweep the area around the SMS for tools, hardware, and any other loose magnetic materials.
3. Post magnetic field warning signs around the SMS.
4. Set VCL GHe flow controllers to auto-flow control mode or manually set the flow as indicated by the MKS flow meters to *Flow = 90 + 61 ´ I/5000*.
5. Insure that LCW is flowing and that alarms are green for all 4 LCW circuits
6. Turn on power supply
   A. Turn power supply control power on
   B. Close power supply 480V breaker
   C. Switch power supply key switch to remote
   D. Verify that all power supply interlocks are satisfied
   E. Verify that slow dump is not initiated
   F. Verify that fast dump is not initiated
   G. Close dump switch
   H. Turn power supply on
   I. Set current target to 0.0 A
   J. Enable power supply ramping
   K. Set current ramp to 2 A/s
   L. Set current target to 2.0 A
   M. After power supply has ramped to 2.0 A, it is safe to ramp to the desired current
   N. Enable power supply ramping

O. Set current ramp to desired value
P. Set current target to desired value

5.3.8 Replacement of an Exit Windows

1. See 5.3.1 for venting the vessel.
2. Move Ferris wheel away from magnet.
3. Loosen the bolts that hold the titanium window assembly to the end cap (every other bolt on the window).
4. Remove all but two of the bolts that were loosened.
5. While holding the window assembly, remove the last two bolts.
6. Disassemble the window assembly.
7. Clean all parts paying extra attention to the o-ring grooves.
8. Make two new o-rings; be sure to clean them thoroughly.
9. Lightly grease (Apiezon Type L) one of the o-rings and re-assemble the window. Filleted edges should be toward the titanium window.
10. Lightly grease the second o-ring and install.
11. Using the window leak-checking flange, leak check the new window and o-rings.
12. Prepare the o-ring surface on the end cap.
13. Re-install window assembly. The 3/8”-16 silicon-bronze bolts, which penetrate blind tapped holes in the downstream end cap, should be tightened to a torque of about 18 ft-lbs. Do not over-tighten these bolts.
14. Leak check the window when the magnet is evacuated.
15. See §5.3.2 step 3.F if the 6 o'clock window (Envy) was replaced.

5.3.9 Replacement of the Beam Line Exit Window

1. Vessel Under Vacuum
   A. Close 24” gate valve and turn off downstream beam line cold cathode gauge.
   B. The Hall C work coordinator should handle replacement of beam line exit window.
   C. Line should be vented with nitrogen.
   D. The re-assembled window must be evacuated and leak checked.
   E. The 24” gate valve may be opened once the vacuum in the beam line is 1×10^{-6} Torr or better.
   F. Disconnect pump stand and move it away from the beam dump.

2. Vessel at Atmosphere
   A. The Hall C work coordinator should handle replacement of beam line exit window.
   B. Leak check window spool and window when the magnet is evacuated.

5.3.10 Replacement/recalibration of Valve Actuators

This procedure defines the proper method for installing and calibrating the G0-modified Novatek cryogenic valve actuators. This is the third revision of the procedure developed on November 2, 2001.

5. Some Information
   A. Controller Pots (numbered from bottom to top – see numbers on controller wall)
      i. P1 Retract Limit

    ii. P2 Extend Limit
    iii. P3 Zero
    iv. P4 Span
  B. The controller's 4-20 mA output lower limit is roughly –25%

6. Preset actuator controller pots before installing actuator
  A. Set display zero
    i. Install 0.1" shims between the brass bar and the bottom of the slot
    ii. Retract actuator until a 0.33" shim can be slipped between motor base and its slot
    iii. If actuator stops turn P1 CCW until movement resumes
    iv. Turn P4 full CW
    v. Set P3 so that display indicates 0% (may change after installation)
  B. Set retract limit
    i. Extend actuator 1%
    ii. Set P1 such that actuator does not retract (CW)
    iii. While holding the retract button, slowly turn P1 CCW until actuator moves
    iv. Continue to adjust P1 until display reads 0%
    v. Confirm that 0.33" shim can be inserted
  C. Set display span
    i. Extend actuator until 0.1" shims can be removed
    ii. Use depth gauge to measure drive head position from a fixed location on the body
    iii. Hold extend button until the drive head has moved 9/16" (0.5625")
    iv. If actuator stops turn P2 CW until movement resumes
    v. Set P4 such that display indicates 100% (may change after installation)
  D. Set extend limit
    i. Retract valve to 99%
    ii. Set P2 such that the actuator does not extend (CCW)
    iii. While holding extend switch slowly turn P2 CW until actuator moves
    iv. Continue to adjust P2 until display indicates 100%
    v. Confirm that the drive head is 9/16" from the distance measured in 6.C.ii
  E. Set actuator for installation
    i. While retracting actuator install 0.1" shims
    ii. Stop when drive head bar touches both shims
    iii. Confirm that the drive head is approximately the distance measured in 6.C.ii
    iv. Note the reading indicated on the display

7. Install the actuator
  A. Put a small dab of anti-seize compound on the threads of the actuator adapter (10-24 and 3/8"-16 LH)
  B. Remove valve hold-down nut
  C. Put 3 narrow SS #10 washers on top of valve and thread adapter into valve
  D. Push valve closed by hand and mark valve shaft
  E. Install actuator base plate and tighten 7/8"-14 nut
  F. Install actuator by turning it CCW on the thread adapter, be sure that the valve does not open by watching the mark made in 7.D above

G. Continue turning actuator until all 4 base plate screws can be installed and the position indicator bracket is pointing away from the center of the cold-box and/or any nearby obstructions
H. The actuator may be opened/closed slightly if required
I. Retract or extend valve such that the mark made in 7.D is properly aligned
J. Place a removable sticker on the body of the actuator near the drive head slot to facilitate setting 100%
K. Mark the position of the bar at a convenient location
L. Make another mark 9/16" above the mark made in 7.K above

8. Reset actuator controller pots
   A. If all went well the pot positions should not require much adjustment
   B. Set zero per 6.A and confirm retract limit
   C. Set span per 6.C using the marks made in 7.K and 7.L and confirm extend limit

9. Calibrate console to read true position
   A. Retract valve until the drive head bar is aligned with the mark made in 7.K
   B. Redefine valve position displayed by console such that:
      i. The position at 9.A above s the console's 0%
      ii. The console displays 100% when the controller displays 100%
      iii. The console displays some negative number when the controller displays 0%

5.3.11 Reloading the PLC Program

1. PLC has crashed
   A. Start the Directsoft Development System. Start ⇒ Programs ⇒ DirectSoft32 ⇒ Directsoft32 Program Tools ⇒ DirectSoft32 Program.
   B. A window will pop up asking about creating a new project. Hit the Cancel button.
   C. Load the program into the PC. File ⇒ Open ⇒ pg<n> where <n> is the current version of the ladder logic (as of 9/18/02, the version is 19).
   D. Load the program into the PLC. File ⇒ Write ⇒ to PLC.
   E. Start the program. PLC ⇒ PLC mode
   F. Choose Run
   G. Hit OK (ignore syntax errors).
   H. Go to subprocedure 4 below if necessary.

2. Stopping the PLC
   A. Verify that the magnet is not powered. Stopping the PLC will cause the power supply to shut down.
   B. Stop the PLC program with the DirectSoft Development System. PLC ⇒ PLC mode
   C. Choose Program
   D. Hit OK

3. Restarting the PLC with previously loaded ladder logic
   A. Restart the program with the DirectSoft Development System. PLC ⇒ PLC mode
   B. Choose Run
   C. Hit OK (ignore syntax errors).

D. Go to 4 below if necessary.

4. Restarting the cold cathode gauge after a PLC stoppage (Note: reloading the PLC program, or stopping and starting it, will shut off the cold cathode. There may also be transient alarms as the system begins reading values back from the sensors.)
   A. Turn the cold cathode gauge on
      i. Go to the main panel in Lookout Direct.
      ii. Press the Gauge Power button to put the Cold Cathode Gauge in the "off" state.
      iii. Press the Gauge Power button again to put the Cold Cathode Gauge in the "on" state.

5. Remotely Rebooting the Console PC
   A. Reboot the operating system
      i. With a Java-enabled web browser, link to http://g0-magnet.jlab.org:5800.
      ii. Start ⇒ Shutdown ⇒ Restart.
   B. Restarting Lookout Direct
      i. Repeat step 5.A if accessing PC remotely.
      ii. Restart Tempmon. Start ⇒ Programs ⇒ 3CPO ⇒ Temperature Display App. Press "Start Service" (if the "Start Service" button is grayed out, then the service has started automatically).
      iii. Restart the webquery MS Excel program. Start ⇒ Programs ⇒ Microsoft Office Tools ⇒ Microsoft Excel. Then open the spreadsheet File ⇒ Open C:\SMS\webquery\webquery.xls. Enable macros. On the summary sheet, press the Start Loop button to begin periodic readout of EPICS variables.
      iv. Restart Lookout Direct. Start ⇒ Programs ⇒ Directsoft32 ⇒ LookoutDirect Tools ==> Lookout Direct
      v. Reload the Lookout process file. File ⇒ Open ⇒ smscntrl.l4p.

5.4 Operating guidelines

Listed here are some "rules of thumb" and general considerations to be born in mind when working on the SMS.

- Cryogenic valves should be operated slowly.

- Mean coil temperature is 4.77 K (steady state, no current)

- Vapor cooled leads should only be heated enough to stop the formation of ice when the magnet is not being powered.

- The length of plumbing between the ESR supply can to the magnet is over 300 feet. The cryolines are mostly coaxial one big heat exchanger). If the LHe return line is not sufficiently cooled it is entirely possible that the following scenario shall occur (based on prior experience):
  1. 4.5K gas enters at the ESR
  2. Magnet internals at approximately 40K
  3. Supply gas picks up heat from return gas while on its way to SMS

4. Supply gas enters SMS' JT valve at or near 38K
5. Helium does not undergo significant cooling JT'ing at 38K
6. Return gas goes through massive heat exchanger and is cooled to the point that its temperature has no effect on the temperature of gas returning to the ESR.

- It's best not to take more flow than is allowed by the ESR. That being said, as far as the SMS is concerned, if the gas entering the JT valve at the SMS is over 10K it does not matter what position the ESR flow restrictor valve is in. And it won't matter until the cryolines are completely cooled.

- The A can has a vacuum leak and must be continuously pumped.

- The perimeter line between the B and C Cans has a spot that sweats when the vacuum goes soft. It is near the expansion joint above the truck ramp door on the B can side.

- The FCL (A.K.A "the Anaconda") has a few heat leaks that show up during cool down.

- ΔP is inversely proportional to density. If the ESR is okay and the hall has not exceeded its limit and all cryoequipment in the hall is operating okay and a pressure drop is observed at the helium inlet it is because the gas is warm ($\rho=f(T)$).

6. Training requirements

It is anticipated that routine operation of the magnet, i.e. changing the current setting, will not require training and can be performed by any member of the shift crew. Training will be reserved for the magnet experts responsible for dealing with abnormal situations. These experts will be specialized in various magnet subsystems; e.g. cryogenics, control system, electrical, etc. Training for these individuals will consist mainly of reading this OSP and documentation for the relevant magnet subsystems and working on the magnet under the supervision of an existing expert.

7. Unusual Emergency Procedures

7.1 Loss of Power

During a loss of power, two un-interruptable power supplies (UPSs) maintain AC power to the control system, the sensors, flow controllers, valve actuators and dump switch for 60-90 minutes. An abrupt loss of power when the magnet is powered will normally cause a fast dump due either to the transient caused by the power supply turning off, or possibly due to loss of LCW flow. If the magnetic field is high enough (current greater than 1000 A) the fast dump will heat the magnet causing helium to evaporate and the relief valve to open briefly. If the power supply remains powered during the power failure (i.e. the 480 V 3-phase power does not shut down) but the AC power to the control system is lost, the control system will attempt to perform a slow dump after 5 minutes. It is important that, during the first hour of a power failure, before the UPSs shut down, the system be put in a configuration that permits safe warm-up.

1. Cryogenic System
   A. Slowly close JT4 to prevent warm gas from the cold helium supply (which begins to warm up when the supply pressure drops) from entering the magnet.

B. If the parallel plate relief valve opened due to a fast dump at significant power, verify that the relief valve has sealed. Use a heat gun to warm the valve if necessary.
C. If helium remains in the reservoir, very slowly open JT9/MV60 to reduce helium reservoir pressure which begins to build as the magnet warms when the supply is closed.
D. Check Hall C's LHe return pressure, if it is greater than the reservoir pressure slowly close JT1. JT9/MV60 must be open at least 5%.
E. Leave lead flow rate at the zero-current setting (90 SLM) and periodically inspect the top of the magnet for ice.
F. If there is still helium in the reservoir, adjust JT9/MV60 to maintain a constant reservoir pressure below the parallel plate relief pressure. If the reservoir pressure rise is too high, the LHe will evaporate.
G. Contact Hall C cryocoordinator.

2. Recovery after short term loss (Note: This procedure assumes that the ESR comes back on quickly.)
   A. Close the plug valve when LHe level is at or near 0%.
   B. Slowly open JT1 to 50%.
   C. Slowly open JT4 to 15%, do not exceed the Hall C's flow limit.
   D. Slowly open JT9/MV60 to 16%
   E. Slowly open JT4 to 30%, observe that the warm helium return temperature drops.
   F. Open the plug valve when the helium return temperature is at or near 10 K.
   G. Observe that the coil temperatures drop.
   H. When liquid begins to accumulate proceed according to the procedures in §5.3.5.

3. Recovery after long term loss (Note: This procedure assumes that the ESR has been off for a long time and the perimeter cryoline has warmed up significantly.)
   A. Slowly open JT9/MV60 100%.
   B. Slowly open JT1 50%.
   C. Slowly open JT4, do not exceed the Hall's limit.
   D. When warm helium return temperature is near the mean coil temperature switch flow from JT4 to JT6
   E. Ensure that the plug valve is closed.
   F. Follow procedure given in §5.3.5.

4. Vacuum Protection
   A. Close gate valves for both turbo pumps.
   B. Close valve on LN2 bayonet pump.
   C. When power is restored, start both fore pumps.
   D. Start LN2 bayonet pump and open its valve.
   E. When foreline pressures reach 500 mTorr start turbo pumps.
   F. Start the turbo pump for the A can (on top of the SOS).
   G. When the pressure above the vessel turbo is 1×10^{-7} Torr open gate valve to vessel.
   H. Open beamline turbo gate valve 10 minutes after turbo gate valve (assumes pumps started at the same time).

7.2 Loss of Cryogens

1. Loss of LHe: Follow steps in §7.1 step 1 above)
2. Loss of LN2
   A. Contact CHL control room and Hall C cryocoordinator.
   B. Leave JT3 and JT5 alone.
   C. When LN2 reservoir empties, pay close attention to LHe system and make adjustments as needed.
   D. The ESR may have to shut down if the LN2 loss is site wide.

8. Instrument calibration requirements for all safety systems

8.1 Analog Quench Protection Adjustment

There are a number of adjustments that may be made to the "Isolation Amplifier/Discriminator" modules of the Analog Quench Protection system. The normal check-out and re-calibration of these modules is described in a report by the designer [Ja97]. Whenever a module is replaced, it is important to check the following:

1. Jumpers in the new module must be in the same configuration as those in the module being replaced.
2. The window thresholds must be set properly.
3. The offset currents (if any) and the corresponding offset compensation at the inputs to the discriminator section of the circuit must be set correctly
4. Current compensation (for the module connected to vapor cooled lead signals) must be set correctly.
5. The bridge must be properly balanced.

Except for the bridge adjustment, where front panel potentiometers are used, all adjustments are made by altering internal potentiometers with the module connected to the back plane via an extender cable. Adjustments may only be performed by a skilled electronics technician or a magnet expert with the proper expertise with reference to the Isolation Amplifier/Discriminator circuit diagram.

8.1 Digital Quench Protection Offset Adjustment.

The Digital Quench Protection system employs lithium batteries to generate a small (micro Amp scale) current in the isolation resistors mounted inside of the magnet. The offset voltage generated by this current flowing in the resistors is used as a measure of the integrity of the resistors. All quench and ramp voltages are superimposed on the offset voltage. In order to analyze the voltages between voltage taps the offset voltages must be measured and entered into the control system so that they may be subtracted by the PLC. This calibration should be performed whenever the magnet temperature has changed significantly or when offsets appear with the power supply off. The following procedure should be used. The magnet-expert password is required.

1. If the digital quench protection system has been disconnected (transition box feed throughs or either P3 or P4 connectors on Box A) allow the system to stabilize for at least 8 hours.
2. Go to the control system "Quench Protection" page and open the "Offsets" pop-up panel
3. Set all offsets to zero.
4. For each voltage measured by the digital quench protection, enter the reading of the voltage into the "Offsets" pop-up panel.

5. Close the pop-up panel.

9. Inspection and Maintenance Schedules

Table 5 shows the inspection and maintenance schedule for the G0 SMS. It is the responsibility of the current "Magnet person on call" to check when these items were last performed and to see that they are performed as needed during his tour of duty.

Item	Description	Frequency
Rupture disks	Visual inspection for obstructions	Monthly
Cryogenic lines	Visual inspection for condensation and/or iceballs	Monthly
Heaters and heating tape	Visual inspection for signs of wear and cracking of heating elements	Monthly
Valve actuators	Visual inspection for wear (metal shavings) on JT valve actuators	Monthly
Vacuum pumps	Replace oil in mechanical pumps	Twice annually or as needed
Cooling water	Check hoses and fittings for leaks and wear spots	Prior to magnet power up
Power supply	Responsibility of JLab staff	Prior to magnet power up
Dump switch	See manual	Prior to magnet power up

Table 5. Periodic inspection and maintenance plan for long term care of the G0 SMS.

References*

An99 T. Antaya, "G0 SMS Final Design, Vapor Cooled Lead No Burnout Analysis (3-990720-BWXT-TAntaya-01", July 20, 1999.

An00 T. Antaya, "Response to Reviewers Comments for the Controls Intermediate Design Review and Power Supply/Quench Protection Review", G0 Internal Report G0-00-017, April 17, 2000

Ba96 L. Bartoszek, D. Beck, P. Brindza, and R. Laszewski, "Technical Specification for the G0 Superconducting Magnet", May 15, 1996.

Ba99a L. Bartoszek, "Design Report on a Proposed Titanium Vacuum Window for the G0 Spectrometer", G0 Internal Report G0-99-038, January 12 1999.

Ba99b L. Bartoszek, "Vacuum Window Testing", G0 Internal Report G0-99-058, December 13, 1999.

Br99 T. Brandsberg, "Loss of Vacuum Pressure analysis for the G0 SMS (3-99110-BW-TBrandsberg-00)", November 1999.

Br00 T. Brandsberg, "Cryobox Vessel Analysis for the G-0 SMS (3-990831-BW-TBrandsberg-01)", March 15, 2000.

Br02 T. Brandsberg, Private communication to G. Mulholland, June 19, 2002.

Ca02 R. Carr, "The G0 Target User's Guide (DRAFT)", G0 Internal Report G0-02-023, February 4, 2002.

Dr99 C. Drennan, "CDF Solenoid Interlocks Component Failure Analysis", December 6, 1999

EHSa Thomas Jefferson National Accelerator Facility Environment, Health, and Safety Manual §3210.

EHSb Thomas Jefferson National Accelerator Facility Environment, Health, and Safety Manual §6500-T33210, NRC Equipment Failure Rate Estimates.

EHSc Thomas Jefferson National Accelerator Facility Environment, Health, and Safety Manual §6440.

EHSd Thomas Jefferson National Accelerator Facility Environment, Health, and Safety Manual §6940-T1 Portable Fire Extinguisher Procedures --- Rev. April 19, 2002.

* Note: all referenced G0 Internal Reports and BWXT documentation is available on-line at one of the following:
http://www.npl.uiuc.edu/exp/G0/secure-bwxt/bwxt-docs/bwxt.html
http://www.npl.uiuc.edu/exp/G0/docs/docs.html
Web security information is available upon request and subsequent approval.

Gu01 K. Gustafsson, “Pressure Rise in Vacuum Chambers due to Rupture of He Coolant Lines”, G0 Internal Report G0-01-051, June 11, 2001.

Ha98 R. Hance, “Solenoid Quench Protection System Single Device Failure Analysis”, FNAL Engineering Note H971203B, Revised January 21, 1998

Ja97 Isolation Amplifier Module Checkout Procedure (Rev. 29, May 1997) - W. Jaskierny, May 8, 1997

Ke01 A. Kenyon, “Auxiliary Pumping for G0: Estimate of Pumping Speeds and Evaluation of Requirements for Additional Pumping (DRAFT)”, G0 Internal Report G0-01-039, August 8, 2001.

Le02 C. Leeman, L. Cardman, R. Ent, A. Lung, and D. Beck, “Memorandum of Understanding Between SURA/TJNAF and UIUC for Nuclear Physics Research on the G0 Experiment (5th draft)”, G0 Internal Report G0-02-018, April 8, 20022

Lu98 A. Lung, D. H. Beck and S. Williamson “The G0 Management Plan”, Jefferson Lab E91-017, G0 Internal Report G0-98-019, November 16, 1998.

Lv00 Y. Lvovsky, G0 Final Quench Protection Analysis, Report to BWX Technology, March 12, 2000.

Me02 B. Metzger, Hall C G0 Schematic, Drawing of G0 Cryogen Plumbing, JLab Drawing Number 67144-E-56234 Rev. A, November 7, 2002.

Mu02a G. Mulholland, “G0 Loss-of-Vacuum Review and Supporting Calculations”, G0 Internal Report G0-02-054, June 18, 2002.

Mu02b G. Mulholland, “Memo: Parallel Plate (PP) Relief of the G0 SMS Vacuum Vessel (with supporting calculations)”, G0 Internal Report G0-02-055, June 19, 2002.

Appendix A
Record of G0 SMS Experts

I have read and understood the attached Operational Safety Procedure. Names may not be added without approval of Steven Williamson or Greg Smith as indicated by initials appearing in the Approval below.

Doug Beck	_____	_____	_____
	Signature	Date	Approval
Andy Kenyon	_____	_____	_____
	Signature	Date	Approval
Damon Spayde	_____	_____	_____
	Signature	Date	Approval
Steven Williamson	_____	_____	_____
	Signature	Date	Approval
Kazutaka Nakahara	_____	_____	_____
	Signature	Date	Approval

Record G0 SMS Experts
(Appendix A Continued)

I have read and understood the attached Operational Safety Procedure. Names may not be added without approval of Steven Williamson or Greg Smith as indicated by initials appearing in the Approval below.

Print Name	Signature	Date	Approval
Print Name	Signature	Date	Approval
Print Name	Signature	Date	Approval
Print Name	Signature	Date	Approval
Print Name	Signature	Date	Approval
Print Name	Signature	Date	Approval
Print Name	Signature	Date	Approval
Print Name	Signature	Date	Approval
Print Name	Signature	Date	Approval
Print Name	Signature	Date	Approval
Print Name	Signature	Date	Approval
Print Name	Signature	Date	Approval
Print Name	Signature	Date	Approval
Print Name	Signature	Date	Approval

Appendix B
Hierarchical Alarm Numbering System

Each alarm is assigned a four-digit number. This number is sent to the digital pager of the "Magnet person on call". The first digit of the alarm number indicates the "subsystem". The second digit refers to physical parameter associated with the alarm (pressure, temperature, etc.). The third digit relates to a device or sub-sub-system. The final digit defines the "level" of the alarm (higher number being more severe). A "†" after a number indicates that that alarm is not implemented. A "*" implies that the alarm is handled by the Lookout program rather than by the PLC.

0000 Unassigned

1000 LCW Water
- 1100 Pressure
- 1200 Temperature
  - 1210 Lead A
    - 1211† Lead A at return temperature high
    - 1212 Lead A at magnet temperature high
  - 1220 Lead B
    - 1221† Lead B at return temperature high
    - 1222 Lead B at magnet temperature high
  - 1230 Jumpers
    - 1231† Jumper at return temperature high
  - 1240 PS
    - 1241† PS at return temperature high
- 1300 Flow
  - 1310 Lead A
    - 1311 Lead A flow low
  - 1320 Lead B
    - 1321 Lead B flow low
  - 1330 Jumpers
    - 1331 Jumper flow low
  - 1340 PS
    - 1341 PS flow low

2000 LHe Circuit
- 2100 Pressure
  - 2110 Inlet pressure low
    - 2111* LHe inlet pressure low
  - 2120 Inlet pressure high
  - 2130 Reservoir pressure low
    - 2131 LHe reservoir pressure low
  - 2140 Reservoir pressure high
    - 2141* LHe reservoir high (yellow)
    - 2142 LHe reservoir high (orange)
    - 2143 LHe rupture disk (red)

- 2200 Temperature
  - 2210 CDHXR Temperature
    - 2211 CDHXR temperature high
  - 2220 LHe Inlet Temperature
    - 2221 LHe Inlet Temperature high
- 2300 Flow
  - 2310 VCL A
    - 2311 VCL A flow low
  - 2320 VCL B
    - 2321 VCL B flow low
- 2400 Level
  - 2410 LHeLevel low
    - 2411 LHe Level low (yellow)
    - 2412 LHe Level low (orange)
    - 2413 LHe Level low (red)
  - 2420 LHeLevel high
    - 2421* LHe Level high

3000 LN2 Circuit

- 3100 Pressure
  - 3110 Inlet pressure low
  - 3120 Inlet pressure high
  - 3130 Reservoir pressure low
    - 3131 LN2 reservoir pressure low
  - 3140 Inlet pressure high
    - 3141* LN2 reservoir high (yellow)
    - 3142 LN2 reservoir high (orange)
    - 3143 LN2 rupture disk (red)
- 3200 Temperature
  - 3210 LN2 Bayonet
    - 3211* LN2 Bayonet temperature high
- 3300 Flow
- 3400 Level
  - 3401 LN2 Level low (yellow)
  - 3403 LN2 Level low (red)

4000 Vacuum

- 4100 Vessel
  - 4110 Vessel TC
    - 4111 Vessel TC pressure high
  - 4120 Vessel CC
    - 4121 Vessel CC pressure high
- 4200 Cryobox/LN2 bayonet
  - 4210 Cryobox/LN2 bayonet TC
    - 4211 Cryobox/LN2 bayonet pressure high

- 5000 Quench Detection and Power Supply
  - 5100 Digital Quench Detection
    - 5110 Transition lead A
      - 5111 Transition lead A voltage high (yellow)
      - 5112 Transition lead A voltage high (orange)
      - 5113 Transition lead A voltage high (red)
    - 5120 Transition lead B
      - 5121 Transition lead B voltage high (yellow)
      - 5122 Transition lead B voltage high (orange)
      - 5123 Transition lead B voltage high (red)
    - 5130 Coils
      - 5131 voltage high on B-side of B
      - 5132 voltage high on A-side of B or Coil C
      - 5133 voltage high on Coil D
      - 5134 voltage high on Coil E
      - 5135 voltage high on Coil F
      - 5136 voltage high on Coil G
      - 5137 voltage high on Coil H
      - 5138 voltage high on Coil A
  - 5200 Analog Quench Detection
  - 5300 Power Supply
    - 5310 Current
      - 5311 Power supply current low

- 6000 UPS
  - 6100 Console UPS
    - 6101 UPS timeout 1 (yellow)
    - 6103 UPS timeout 2 (red)
  - 6200 Dump Switch UPS

- 7000 Strain
  - 7100 Front-back strain imbalance
    - 7101 Front-back strain imbalance high
  - 7200 Left-right strain imbalance
    - 7201 Left-right strain imbalance high
  - 7300 Shear pin strain
    - 7301 Shear pin strain high

- 8000 System
  - 8100 PLC
    - 8110 Heartbeat
    - 8120 Communication
  - 8200 TempMon
    - 8210 Heartbeat

- 9000 Test

Appendix C
Pressure Vessels and Relief Devices

This appendix lists the various devices used to safely relieve pressure the SMS cryogenic systems. As installed values for relief points and flow capacities are also shown in the table. In the table below, FV indicates "Full Vacuum" and N/A means "Not Available".

No	Component	Documentation on Design (Document and page)	Physical Part or test Results (Model, size, reports of test)
1	N2 Tank	MAWP: 88.2 PSI Document: 3-990831-BW-TBrandsberg-01 Page: 3 @ Temp: 80 K (note with FV on outside)	Manufacturer: BWXT Volume: 2.39 cubic feet Material: 316 SST Test Pressure: 101.5 PSIA Date: 10 July 2002 By: Paul Brindza
2	He Tank	MAWP: 73.5 PSI Document: 3-990831-BW-TBrandsberg-01 Page: 3 @ Temp: 4 K (note with FV on outside)	Manufacturer: BWXT Volume: 5.67 cubic feet Material: 316 SST Test Pressure: 84.5 PSIA Date: 19 June 2002 By: Paul Brindza
3	N2 Relief Valve	Relief Pressure: 73.5 PSIA +/- Accuracy: N/A Pipe Size: ¾" Orifice No: -4 Capacity: 0.15 kg/s	Manufacturer: Anderson-Greenwood Seat and Seal Material: Viton Capacity: N/A Test Pressure: N/A Date: N/A By: N/A
4	He Parallel Plate Relief Valve	Relief Pressure: 25 psia +/- Accuracy: N/A Pipe Size: 3" Orifice Size: 3 ½" Capacity: N/A	Manufacturer: Jefferson Lab according to drawing 75400-D-0008 Seat and Seal Material: Viton Capacity: N/A Test Pressure: 42 PSIA Date: 12 October 2002 By: Andy Kenyon and Steven Williamson
5	He Relief Valve	Relief Pressure: 58.8 PSIA +/- Accuracy: N/A Pipe Size: 1 ½" Orifice No: G Capacity: 1.56 kg/s	Manufacturer: Anderson-Greenwood Seat and Seal Material: Teflon Capacity: N/A Test Pressure: 58.8 PSIA Date: 27 July 2002 By: Andy Kenyon
6	N2 Rupture Disk	Burst Pressure: 75 PSIG +/- Accuracy: 5% @ Temp: 72° F Pipe Size: 1" Document: G0-02-054 Page: 13	Manufacturer: Fike Disk Material: SST
7	He Rupture Disk	Burst Pressure: 60.8 PSIG +/- Accuracy: 5% @ Temp: 72° F Pipe Size: 3" Document: G0-02-054 Page: 3	Manufacturer: Fike Disk Material: SST
8	Vacuum Vessel	***Not Required***	***Not Required***