Specifications of a Beam-Synched Time Reference Device for the G^0 Experiment

From: Mark Pitt, Brian Quinn for the G^0 collaboration
To: Curt Hovater, John Musson, Bill Vulcan
Date: February 16, 2002

In contrast to other parity-violation experiments at JLAB, the G^0 experiment uses time-of-flight measurements. Thus, we are sensitive to any potential helicity-correlation in the arrival time of the electron micro-bunches in Hall C. To measure and correct for the possibility of this effect, we need a device and associated electronics that generates a time reference that is phase-shifted (relative to the accelerator RF signal) to match the arrival time of the electron micro-bunch in Hall C. G^0 will run with a special laser so that only 1 out of every 16 of the usual microbunches are filled. Thus, the microbunch arrival frequency is 31.1875 MHz, and the charge per micro-bunch is 1.28 pC yielding an average current of 40 μA.

We require two signals:

CLK: 499 MHz square wave
YO: 499 MHz/16 = 31.1875 MHz square wave

Both signals must be phase shifted (with respect to the accelerator RF signal) to match the arrival of the electron micro-bunches in Hall C. A possible scheme for how to do this is shown in Appendix A (diagram from Larry Cardman).

Specifications for this system:

- Integration time: ~50 μs, it would be useful to have this adjustable over some range (say 10 – 500 μs) if that were conveniently achievable
- Time jitter of CLK and YO (relative to accelerator RF signal): < 0.1 ns for a measurement integration time of 50 μs
- Relative time jitter between CLK and YO: < 50 ps
- Square wave quality (CLK): rising and trailing edges equally spaced to within 20 ps (differential ECL most convenient here?)
- Square wave quality (YO): comparable to CLK desired, but constraints can be relaxed if necessary (see Quinn's email in Appendix C)

This system requires a beam-pickup device to provide a signal for the phase-shifting reference. This was discussed at a meeting in May 2001, and it was determined that the following two devices may work:

1. Thin wire BPM (standard M15 BPM): The output of the 4 thin wires would be summed to reduce sensitivity to beam position variations. John Musson did calculations that show that the signal from this device should be adequate at the G^0 current to achieve a time jitter specification of <1 nsec. Could this do less than 0.1 nsec, as well?
2. Microwave cavity monitor with reduced Q

In either case, we don't want the timing measurement to be compromised by variations in beam position and current. These sensitivities are estimated in Appendix B, and it appears that the thin wire BPM would be adequate from this point of view.

Finally, as discussed in Appendix B, this device should probably be upstream of the Hall C fast raster. If a thin wire BPM is acceptable, then perhaps one of the existing BPMs in that region can be used for the beam-pickup device. Possible candidates may be IPM3C18, IPM3C19, or IPM3C20.

Appendix A: Larry Cardman's diagram

MAY-25-2001 13:50 FROM- T-908 P 002 F-307

DATE SUBJECT SHEET NO.

CD. BY DATE JOB NO.

BEAM SYNCHED TIME REF.

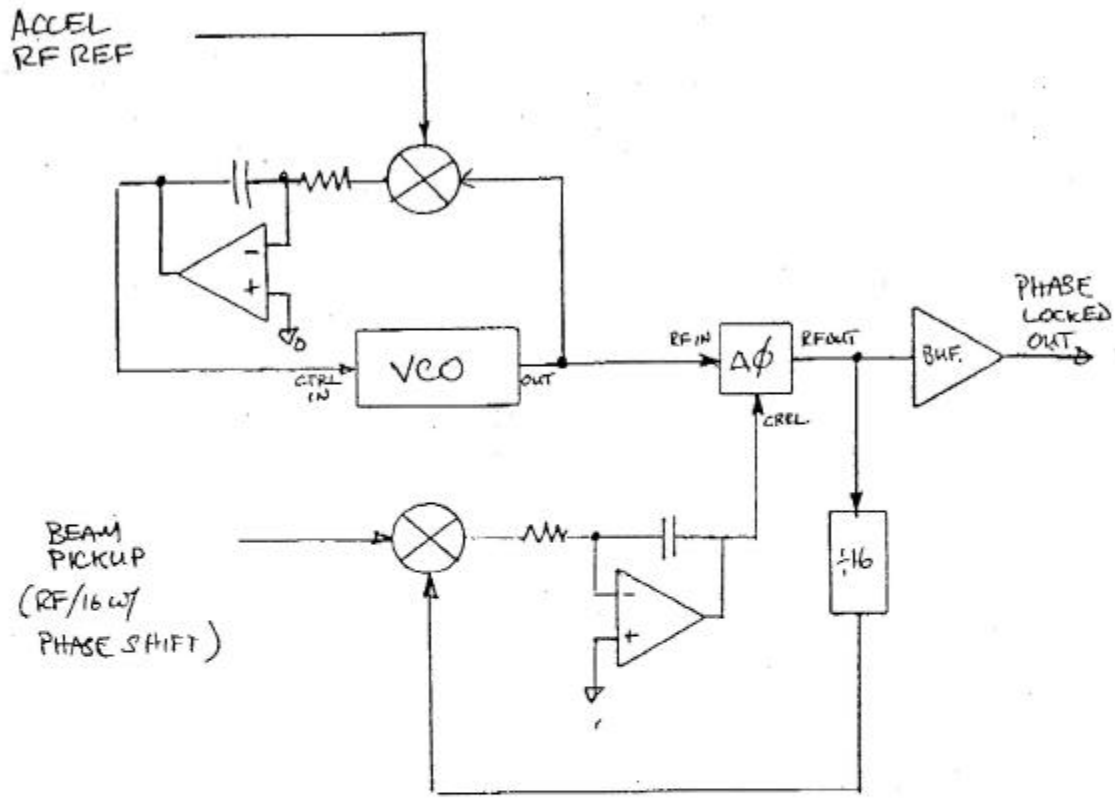

CIRCUIT WILL GENERATE A LOCAL OSCILLATOR W/ ACCEL RF STABILITY BUT PHASE-SHIFTED TO LOCK W/ BEAM ARRIVAL @ TARGET

CAN MODIFY, EG, FOR RF/2^N OPERATION

Appendix B: Crude estimates of sensitivity to beam current and position variations

Beam current and position variations can lead to variations in the output signal of the thin wire BPMs. These signal variations can lead to time-walk in the determination of the beam arrival time. In this appendix, I make some really pessimistic assumptions. Even under those assumptions, it appears that we will have adequate insensitivity to these variations.

First, I make the far too conservative assumption that the rise time of the signal is equal to the full 32 nsec interval. Then, for a given threshold, the variation in the pickoff time with signal is just given by:

$$\Delta t = \left(\frac{\Delta S}{\bar{S}}\right)(32 \text{ nsec})$$

We are concerned with two sorts of current and position variations:

- Variations at the timescale of the integration time (50 μsec). For unrastered beam, the noise in the beam at this frequency (~ 20 kHz) is expected to be not larger than about 0.2 mm for beam position and 1.0% for beam current. The fast raster runs at ~20 kHz, so the beam timing device should use one of the BPMs upstream of it.
- Helicity-correlated position and intensity variations that don't average to zero over a full run (700 hours). These can lead to a false helicity correlation in the arrival time determination. Using feedback systems, we expect the following numbers for the maximum run averaged helicity-correlations: < 1 ppm for intensity, < 20 nm for position.

Intensity variations: These are easily estimated with the above formula. The variations on the timescale of the integration time would lead to time jitter <0.32 ns. This is a little higher than our specification of 0.1 ns, but it is probably okay given the conservative assumption we are making in the above formula. For the helicity-correlated variation, we have that the run-averaged helicity-correlated time jitter would be <32 fs. This is a little higher than our desire of 10 fs, but it is also okay given our conservative assumption.

Position variations: For a single thin-wire BPM wire the signal variation is 5.4%/mm of beam motion. For the 4-wire sum, the sensitivity to beam motion is significantly reduced. I will assume it is reduced by a factor of 10, but that is probably conservative. Thus we will use 0.5%/mm for estimation purposes. The variations on the timescale of the integration time would lead to time jitter < 0.03 ns, which is lower than our specification. For the helicity-correlated variation, we have that the run-average helicity-correlated time jitter would be <3.2 fs.

Presumably, the sensitivity to intensity variations is the same for microwave cavity monitors versus thin-wire BPMs. The sensitivity of a standard JLAB microwave cavity charge monitor to beam position variations is less than the 4-wire sum BPM, but even the 4-wire sum BPM appears to be adequate for our purposes.

Appendix C: Email from Brian Quinn describing requirements

From QUINN@UQUARK.PHYS.CMU.EDU Tue Feb 19 18:05:23 2002
Date: Sun, 20 May 2001 02:23:31 -0400
From: Brian Quinn <QUINN@UQUARK.PHYS.CMU.EDU>
To: MUSSON@JLAB.ORG, HOVATER@JLAB.ORG
Cc: VULCAN@JLAB.ORG, PITT@VT.EDU, QUINN@UQUARK.PHYS.CMU.EDU
Subject: Time reference signal for G0 experiment

Dear John and Curt,

I attach below some introductory remarks concerning the timing signals we need for time-of-flight measurements in the G0 experiment. These are extracted from some information I sent to Bill Vulcan in the past year, with a few parenthetical remarks in {} to indicate updates reflecting out Thursday meeting. In retrospect, I should have circulated this before the meeting so we could have all started on the same page. Note that because this is a parity-violation experiment, we have unusually tight requirements for sensitivity to any helicity-correlated effects.

I feel that we made progress in the meeting in ruling out the possibility of detecting the required 31.1875 MHz signal off of an ordinary BCM. Now it remains to be seen how the signal can be detected (and what jitter and stability against position and intensity changes can be achieved). I'm not sure whether you can learn what you need to know just from calculations and bench-tests. It may be worth remembering that source tests with the G0 beam structure will be carried out soon. I suppose this might be useful if you want to look at the actual signals generated at 31.1875 MHz in beam monitors.

If you have any questions about our experiment or the required signals, please contact me (bquinn@cmu.edu).

Many thanks,
Brian

We need two signals, which we can refer to as CLK and Y0.
CLK is a 499 MHz square wave
Y0 is a 499/16 MHz = 31.1875 MHz square wave

Most importantly, BOTH signals must be phase shifted to match the phase of ARRIVAL of the G0 beam pulses (at 499/16 MHz) at the target in Hall C. (Not to be confused with synchronizing with signals from the source, which may not reflect helicity-correlated variation in transit time.) Overall phase lags are irrelevant and can be compensated by cable delays. But any shift in arrival time of the pulses (especially if it is correlated to helicity flips) must result in a matching shift of both CLK and Y0.

A starting point for the generation of these signals is the figure titled "Beam Synched Time Ref." which was drawn by Larry Cardman several years ago. Some thought will be required in selecting the 'integration time' for the phase matching. We want the time to be large enough so noise is integrated out, resulting in a stable pair of signals, but short enough so a helicity-correlated shift in the arrival phase of the pulses will be reflected in a time which is very short compared to the 1/30 s macro-pulse period for which we will accumulate data with that helicity. {A resonable estimate might be something like 30-50 microseconds for the integration time.. this is what we assumed in discussions during the meeting.}

An important point for consideration is ensuring that a suitable "Beam Pickup" signal is available to be used as the reference for phase shifting. Since beam arrival it is a 31.1875 MHz signal, it is not well matched to the beam monitor cavities in Hall C. {...as was confirmed during the meeting.}

Generation of this signal by dividing down a 499 MHz cavity signal excited by the beam is likely to be UNsatisfactory as the phase of the resulting signal would be undefined relative to the beam in steps of 2 ns. (It might jump randomly, and would almost certainly acquire a random shift after each beam-off period.) Generation of the signal from a scintillator signal is likely to be subject to unacceptable shot noise unless the scintillator is running at unbearable rates. Apparently the best source of the phase reference signal would be the small pickup of 31.1875 MHz off a monitor cavity. It remains to be verified that that signal is detectable despite being extremely far off resonance. {from the meeting, only a de-Qed cavity is a possibility, or stripline.}

Since both transitions of CLK will be used to drive our time-encoding electronics, it is important that it be a true square wave with equal time above and below the transition point (to within a few tens of ps). Differential ECL is probably the most convenient form for this signal.

A square wave would also be convenient for Y0, but the time of the trailing edge is not as critical. The leading edge of Y0 will be used to generate a gate to be applied to CLK to generate a gated clock train. That train will be fed to our time encoding boards as their time reference. It is critical that the phase of Y0 must not slip relative to CLK as that could cause the gated clock train to have extra pulses, too few pulses, or pulses shifted by one cycle of CLK relative to the desired train. If Y0 is not symmetric, we must be careful to distinguish between the leading and trailing edges (a difference which can be obscured by differential ECL).

There are several different answers to the question of how precise the timing of these signals must be.

We're timing at the .25 ns level (in the case of the French) so we certainly want the intrinsic quality of the signals to be good compared to that (better than 50 ps?). (The French time relative to Y0, the North American boards relative to CLK, but in 1 ns bins.)
{In the meeting we gave this constraint as 1ns for a measurement averaged over 30-50 microseconds. That is our drop-dead limit, but we would certainly prefer much better jitter, small compared to .25ns, as mentioned above, unless that is completely impossible!}

The timing of Y0 relative to CLK is especially sensitive for the North American boards. There's about a 200 ps window in which Y0's leading edge must occur relative to the CLK to produce a properly gated clock train. I wouldn't want Y0 to shift by anything like +/- 100 ps relative to CLK because that would use up all of our wiggle-room in timing in Y0 (we have on-board digital delay to allow us to position Y0, but no compensation if it moves around). I'd like the timing of Y0 to be stable relative to the timing of CLK to well under 50 ps.

The most important timing (the whole reason for phase-shifting CLK and Y0 relative to the beam pulse in Hall C) is the time shift between these signals and the arrival of beam (or really the arrival of beam-induced

signals at the G0 electronics area) must be stable to a small fraction of a picosecond for one helicity versus the other!
{in fact, we want it limited to an average of 10 femto-seconds over a 40 day run} While that may sound pretty tight, the real question is 'how could it not be?' How could the timing of the CLK and Y0 depend on beam helicity? We hope that the biggest potential effect, helicity-correlated transit time through the accelerator and switchyard is automatically corrected because the signals are synched to Hall C beam, not to the source. Other possible sources of problems would be helicity-correlated beam intensity (probably at the ppm level, but it would be nice to allow for 100's of ppm) and helicity-correlated beam position (probably sub-micron shifts). We need to ensure that changes in the beam at those sort of levels won't cause shifts in the time of the synch signals. For example, we can't have huge walk with variation in the size of the beam pick-off signal. If you look for zero-crossing on the beam pickup, for example, I would think that would make us pretty immune to change in beam current or position. {It will certainly be necessary to investigate sensitivity to position. There could be a sub-micron correlation of position and helicity. We can't afford to have that introduce an uncorrectable shift in the time of these Y0 and CLK signals.}

If there were a significant change in transit time through the accelerator for the different helicities, we would have to worry about how long the phase-sync circuits take to respond. If they have integration times which are small compared to the ~200 microseconds for which we gate off for helicity changes, then there should be no problem. If the integration time is longer (to get good stability) there is the danger that the time will be shifting at the start of each 1/30 s macropulse while we're taking data. {Is the assumption of 30-50 microseconds reasonable? We could use a longer integration time, if that is absolutely necessary to reduce the jitter. But we can't tolerate integration times approaching a mili-second.}

Email: bquinn@cmu.edu
Phone: (412)-268-3523
Fax: (412)-681-0648

Physics Department
Carnegie Mellon University
Pittsburgh, PA, 15213 USA